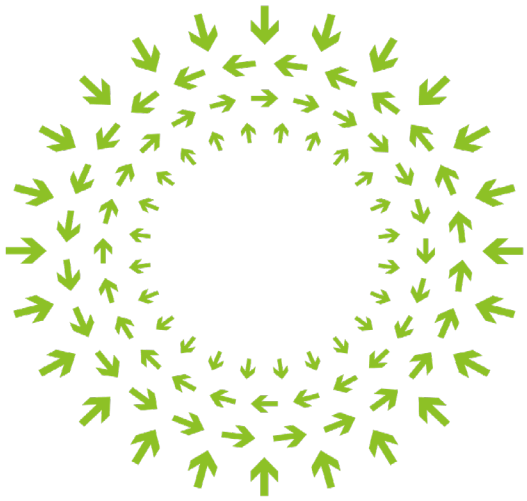

OPEN
Compute Project

# Endurance Storage System

Version 4, Revision 0
September 2025

Authors:
Patrick Hampton, System Architect, Jabil
Ryan Belanger, System Architect, Jabil

## Version History

| Date | Version # | Author | Description |
|---|---|---|---|
| 21 JUL 25 | 1.0 | P. Hampton<br>R. Belanger | Initial release |
| 25 JUL 25 | 2.0 | P. Hampton<br>R. Belanger | Changes made from feedback |
| 01 AUG 25 | 3.0 | P. Hampton<br>R. Belanger | Added sustainability tenet<br>Made minor grammar and formatting changes |
| 22 SEP 25 | 4.0 | P. Hampton<br>R. Belanger | Removed Acknowledgements section |
| | | | |
| | | | |
| | | | |

## Current Template Version:

OCP Modular Base Specification Template V1.6.0

# Table of Contents

Version History ..... 2
Current Template Version: ..... 2
1. License ..... 5
1.1. Open Web Foundation (OWF) CLA ..... 5
2. Compliance with OCP Tenets ..... 6
2.1. Openness ..... 6
2.2. Efficiency ..... 6
2.3. Impact ..... 6
2.4. Scale ..... 6
2.5. Sustainability ..... 6
3. Scope ..... 7
4. Overview ..... 7
5. Specification ..... 8
5.1. Description ..... 8
5.2. Mechanical Requirements ..... 9
5.2.1. Overall Dimensions ..... 9
5.2.2. Rack Compatibility ..... 9
5.2.3. General Requirements ..... 10
5.2.4. Storage Bay Modularity ..... 12
5.2.5. OCP NIC Flexibility ..... 13
5.2.6. Storage Bay Modularity ..... 14
5.3. System Requirements ..... 14
5.3.1. Host Processor Module (HPM) ..... 16
5.3.1.1. HPM Component Placement ..... 17
5.3.2. Power Distribution Board (PDB) ..... 18
5.3.2.1. PDB Component Placement ..... 19
5.3.3. Fan LED Board ..... 19
5.3.3.1. Fan LED Component Placement ..... 20
5.3.4. U.2 Dual Board ..... 20
5.3.4.1. U.2 Dual Board Component Placement ..... 21

5.3.5. Midplane ..... 22
5.3.5.1. Midplane Component Placement ..... 23
5.4. Interposers ..... 24
5.4.1. Interposer Connectors ..... 24
5.5. Cable Routing ..... 25
5.6. Thermal Design Requirements ..... 26
5.6.1. Thermal Kits ..... 27
5.7. System LEDs ..... 28
5.7.1. Operator Display Panel (ODP) ..... 28
5.7.2. Drive LEDs ..... 30

# 1. License

## 1.1. Open Web Foundation (OWF) CLA

Contributions to this Specification are made under the terms and conditions set forth in **Modified Open Web Foundation Agreement 0.9 (OWFa 0.9)**. (As of October 16, 2024) ("Contribution License") by:

Jabil Inc.

Usage of this Specification is governed by the terms and conditions set forth in **Modified OWFa 0.9 Final Specification Agreement (FSA)** (As of October 16, 2024) **("Specification License").**
You can review the applicable Specification License(s) referenced above by the contributors to this Specification on the OCP website at https://www.opencompute.org/contributions/templates-agreements.
For actual executed copies of either agreement, please contact OCP directly.

**Notes**:

The above license does not apply to the Appendix or Appendices. The information in the Appendix or Appendices is for reference only and non-normative in nature.

NOTWITHSTANDING THE FOREGOING LICENSES, THIS SPECIFICATION IS PROVIDED BY OCP "AS IS" AND OCP EXPRESSLY DISCLAIMS ANY WARRANTIES (EXPRESS, IMPLIED, OR OTHERWISE), INCLUDING IMPLIED WARRANTIES OF MERCHANTABILITY, NON-INFRINGEMENT, FITNESS FOR A PARTICULAR PURPOSE, OR TITLE, RELATED TO THE SPECIFICATION. NOTICE IS HEREBY GIVEN, THAT OTHER RIGHTS NOT GRANTED AS SET FORTH ABOVE, INCLUDING WITHOUT LIMITATION, RIGHTS OF THIRD PARTIES WHO DID NOT EXECUTE THE ABOVE LICENSES, MAY BE IMPLICATED BY THE IMPLEMENTATION OF OR COMPLIANCE WITH THIS SPECIFICATION. OCP IS NOT RESPONSIBLE FOR IDENTIFYING RIGHTS FOR WHICH A LICENSE MAY BE REQUIRED IN ORDER TO IMPLEMENT THIS SPECIFICATION. THE ENTIRE RISK AS TO IMPLEMENTING OR OTHERWISE USING THE SPECIFICATION IS ASSUMED BY YOU. IN NO EVENT WILL OCP BE LIABLE TO YOU FOR ANY MONETARY DAMAGES WITH RESPECT TO ANY CLAIMS RELATED TO, OR ARISING OUT OF YOUR USE OF THIS SPECIFICATION, INCLUDING BUT NOT LIMITED TO ANY LIABILITY FOR LOST PROFITS OR ANY CONSEQUENTIAL, INCIDENTAL, INDIRECT, SPECIAL OR PUNITIVE DAMAGES OF ANY CHARACTER FROM ANY CAUSES OF ACTION OF ANY KIND WITH RESPECT TO THIS SPECIFICATION, WHETHER BASED ON BREACH OF CONTRACT, TORT (INCLUDING NEGLIGENCE), OR OTHERWISE, AND EVEN IF OCP HAS BEEN ADVISED OF THE POSSIBILITY OF SUCH DAMAGE.

# 2. Compliance with OCP Tenets

## 2.1. Openness

The Endurance Storage System offers openness by providing a flexible design for either U.2 2.5-inch SFF SSDs or for Direct Flash Modules (DFM) from Pure Storage, and an Intel Eagle-Stream reference system for others to use in the data center environment. This base specification has been developed by Jabil, Inc. with the many OCP elements as a part of the building blocks for the system.

## 2.2. Efficiency

The major advantage of this storage system is that it leverages the ORv3 21-inch 2OU form-factor which allows for increased capacity by supporting twenty-four PCIe 4.0 DFMs or twenty-four PCIe 5.0 U.2 flash SSD drives. Additionally, by supporting DFMs, the system offers higher storage density per drive-module slot, higher durability, lower power consumption compared to traditional flash SSDs, and improved performance consistency due to its simplified architecture.

## 2.3. Impact

This reference design provides the industry with its first OCP 2OU storage system that includes twenty-four slots in 21-inch enclosure which support traditional U.2 2.5-inch SFF flash SSDs and DFMs. The current DFM offering capacity is 75TB at an average power consumption of 0.2W per terabyte which yields a storage density of 1.8 petabytes per 2OU under 360 Watts. The system can also support 128TB SSDs and 150TB DFMs which pushes the storage density up to 3.6 petabytes per 2OU when these components become available.

## 2.4. Scale

This system is easily deployed at any scale due to three factors. The first factor is that the design enclosure is ORv3 compliant (48V-52V busbar, 21-inch enclosure) which allows it to be immediately deployed into existing infrastructures. The second factor is that all twenty-four drives or modules are removable via the front of the enclosure which allows them to be replaced when higher capacity units are available. Lastly, the system includes two OCP-compliant 3.0 200GbE SFF network interface cards (NIC) that can be inserted in front of the enclosure as well. Each NIC is connected to the processors through PCIe5.0 utilizing 16-lanes which allow future support for 400GbE NICs in either SFF or TSFF.

## 2.5. Sustainability

This system is designed to maximize storage density while minimizing environmental impact. By efficiently supporting high-capacity storage within a compact footprint, it reduces the overall

power consumption, rack space, and raw materials required per unit of data stored, contributing to lower energy usage and improved datacenter sustainability.

The design emphasizes modularity and part commonality across multiple chassis sizes. This approach significantly reduces the need for new tooling and part fabrication, thereby lowering manufacturing emissions and material waste. Additionally, shared components streamline inventory management and reduce the environmental footprint associated with logistics and warehousing.

## 3. Scope

This specification describes the main technical design aspects of the Endurance Storage System based on Intel Xeon Scalable processors (codename Eagle Stream: 4th/5th generation). This document provides a design specification for an Open Rack v3 (ORv3) 21-inch 2OU product that details the features and functionality of a general purpose 2-socket Intel SPR/EMR processor server board and DFM/SSDs for adoption by the Open Compute Project community.

## 4. Overview

This document serves as the specification for the Endurance Storage System reference system design. The system is a rack-mounted, all-flash based storage server in a 2OU, ORv3 48V-52V busbar powered, 21-inch form factor with support for either twenty-four U.2 SSDs (up to 128TB/drive) or twenty-four Pure Storage DFMs (up to 150TB/module). The storage array of modules or drives is connected to an Intel Eagle Stream platform with two SPR/EMR processors through three midplanes that attach the drives via four-lane PCIe connections per drive/module. Endurance also includes two internal M.2 boot-drives, two internal U.2 drives, two external 400Gb-capable SFF/TSFF OCP3.0 NICs, and front-panel management ports with system LEDs.

This system offers flexibility and modularity on key design aspects that allow for higher configurability options. The front OCP NIC slots can accommodate either an SFF or TSFF card variant within the same card slot. The Endurance Storage System's drive carriers can accommodate either a Pure Storage DFM or a 2.5-inch U.2 SSD. In addition to these flexible options, the internal storage bay which houses the twenty-four storage carriers is compatible with either a 2OU 19-inch chassis or a 2OU 21-inch chassis.

In summary, the Endurance Storage System provides an ORv3-ready 2OU server with dual OCP3.0 NICs that has a total capacity of 1.8 petabytes/2OU when populated with twenty-four 75TB DFMs with an ultra-efficient 0.11 CFM/W cooling subsystem. In the future, the current system will support an increased capacity of 3.6 petabytes/2OU with 150TB DFMs and 3.072 petabytes/2OU with 128TB SSDs when they become available in the market.

# 5. Specification

## 5.1. Description

The Endurance 2OU storage server is a 21-inch, full-width chassis with the features outlined below:

| | |
|---|---|
| **From Factor** | 2OU Full Width Compute Node<br>Node Dimension: 867.6(D) x 537(W) x 93.4(H) mm |
| **System Power** | Support Open Rack v3 with DC48~52V power bus bar |
| **System FAN** | 6x 6056 dual router fans |
| **Processors** | Intel EGS 2S CPU, up to SPR/EMR 350W TDP |
| **Memory** | 8x DDR5 DIMM Slots, 4 Channels and 4 Slots per Socket<br>Support 4x DDR5 RDIMM/9x4/3DS, 4 per Socket |
| **Storage** | Boot Drives:<br>• 2x M.2 on HPM<br>• 2x U.2 internal to system<br>SKU options:<br>• Supports front 24x DFM drives<br>or<br>• Supports front 24x SSD drives |
| **Networking** | 2x OCP NICs, hot-plug unsupported. TSFF OR SFF form factor.<br>Hardware damage prevention by surprise removal. |
| **Management** | BMC ASPEED AST2600<br>No dedicated network support.<br>Management port from OCP0 Share NIC |
| **On-Board I/O Connector** | 3x MCIO x16 for PCIe expandable (1x for OCP3.0 NIC)<br>1x OCP3.0 (PCIE Gen5 x16)<br>8x MCIO x8 for storage<br>2x M.2 (2280/22110) boot drive slots (x2 NVMe) |
| **Front IO / LED** | 1x Power Button/LED, 1x UID Button/LED<br>1x USB-C debug console. |
| **Rear IO / LED** | 6x Fan Fault LED |
| **TPM** | 1x down-device TPM (unit test only)<br>1x TPM module (unit test only and off-the-shelf TPM) |

*Table 1: Endurance HW Overview*

## 5.2. Mechanical Requirements

This section outlines the mechanical design of the system.

### 5.2.1. Overall Dimensions

Endurance is a full width 2OU, 21-inc chassis with overall dimensions as indicated below:

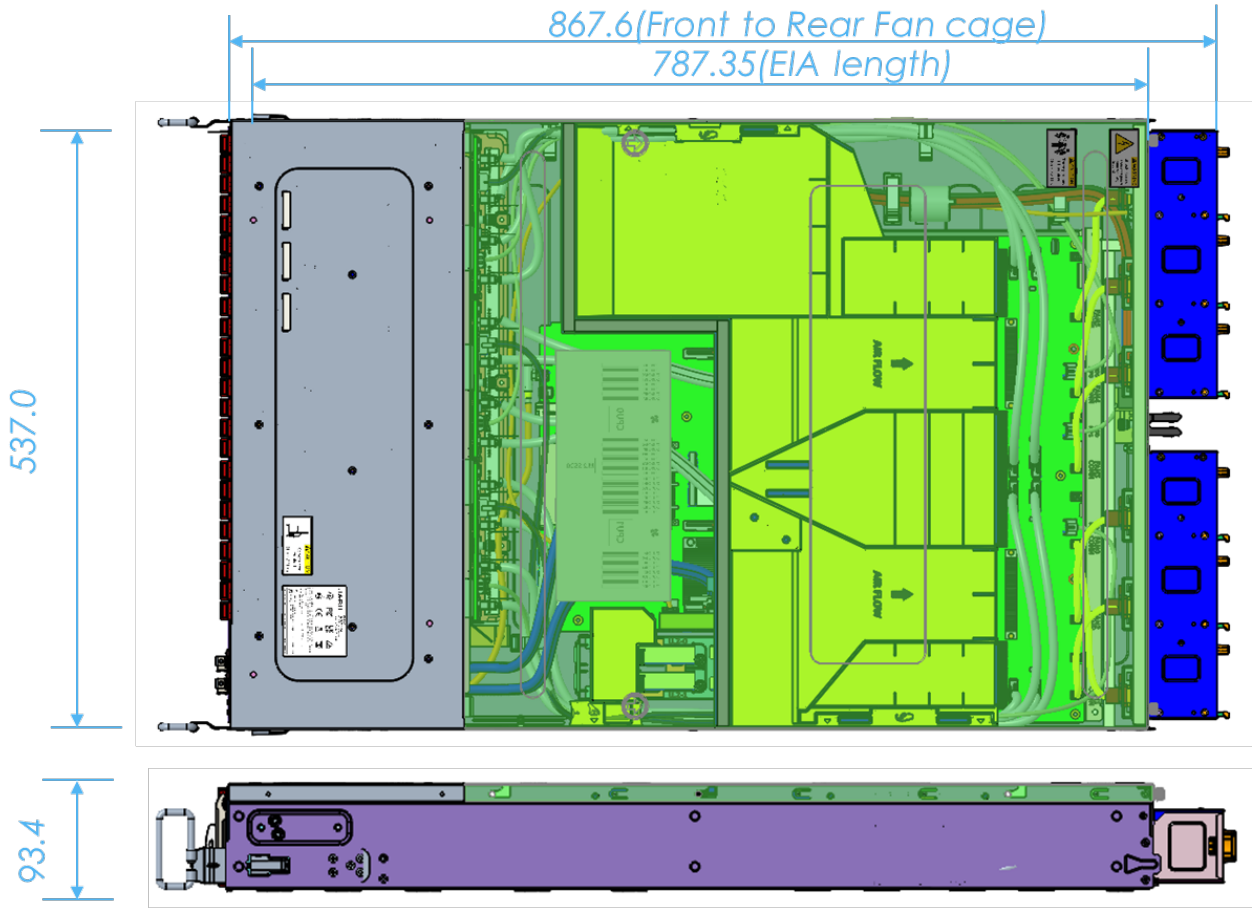


*Figure 1: Endurance Overall Size*

### 5.2.2. Rack Compatibility

Endurance is a 2OU, 21-inch Full width chassis that is compliant with Open Rack ORV3.

### 5.2.3. General Requirements

Endurance overall chassis views summarized in this section. Figure 2 shows an exploded view of the chassis with the top cover removed. The figure identifies the major components of the server and indicates replaceable (FRU) components.

Drive

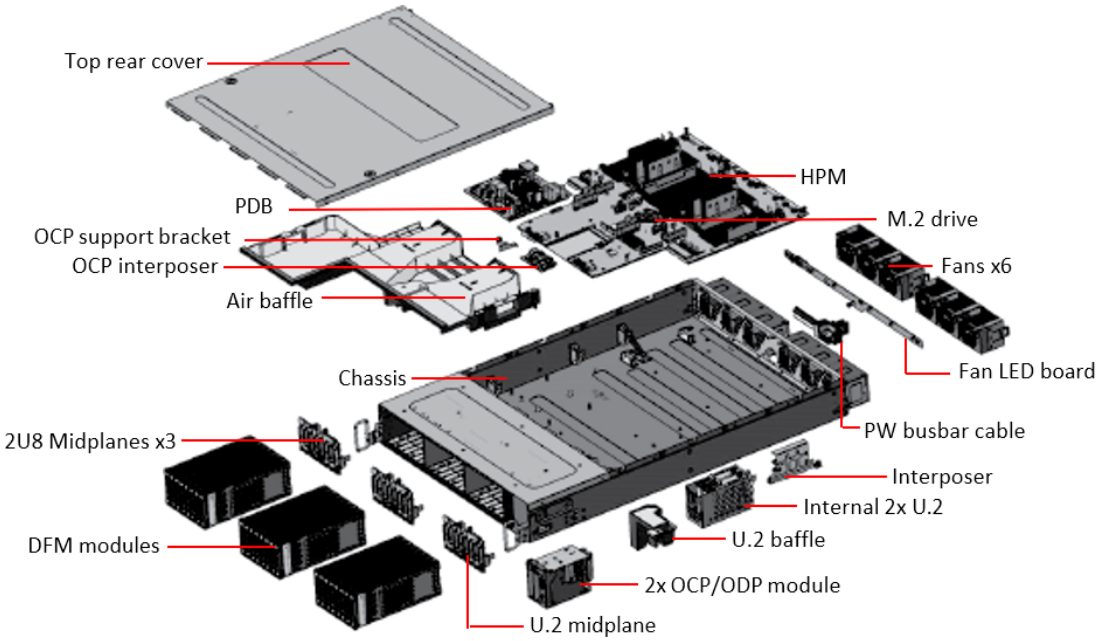


*Figure 2: Endurance 24DFM+2xU.2 Exploded View*

Figure 3 below illustrates the front panel features and 24x DFM drives. For more information on the display panel features, see section 5.7.1 Operator Display Panel.

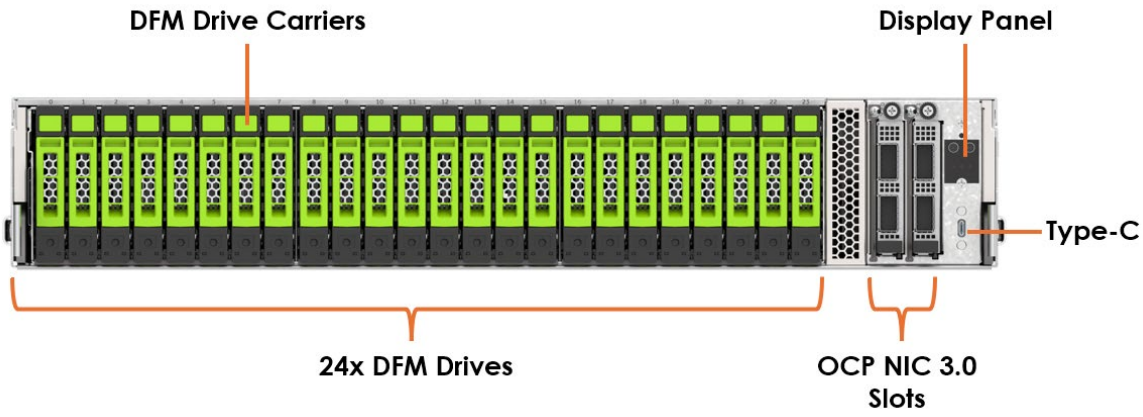


*Figure 3: Front View*

Figure 4 below shows the rear side view of the chassis and highlights the fan array and associated components.

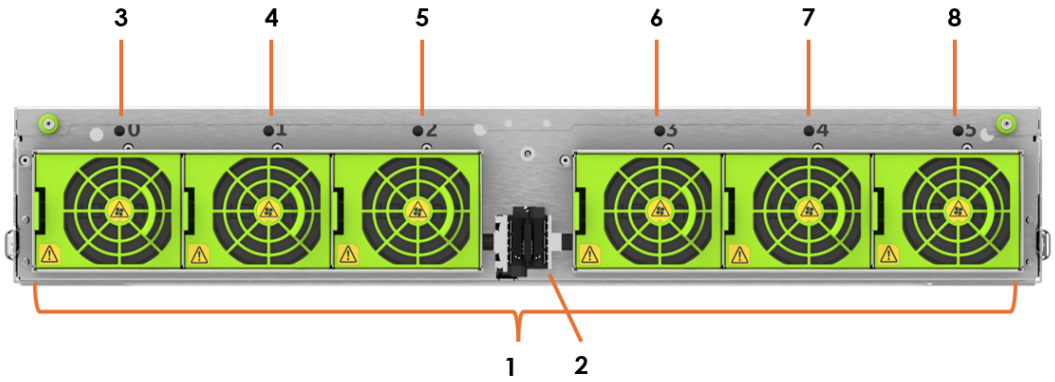


| # | Description |
|---|---|
| 1 | 6x 6056 Fans (0-5) |
| 2 | ORV3 Power connector (to rack power busbar) |
| 3 | Fan LED 0 |
| 4 | Fan LED 1 |
| 5 | Fan LED 2 |
| 6 | Fan LED 3 |
| 7 | Fan LED 4 |
| 8 | Fan LED 5 |

*Figure 4: Rear View*

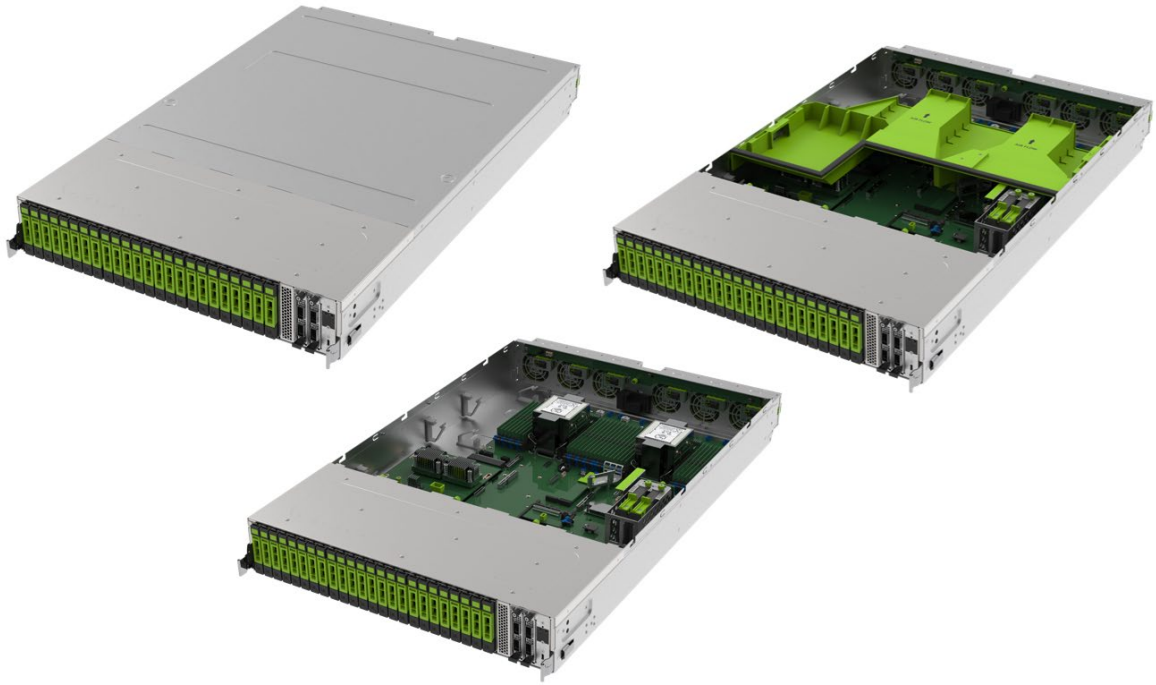

*Figure 5: Endurance ISO Views*



*Figure 6: Endurance Top Views*

### 5.2.4. Storage Bay Modularity

The DFM Storage Bay is compatible with both a 2OU 21-inch chassis as well as 2OU 19-inch chassis, offering the highest degree of flexibility and configurability.

Figure 7, below illustrates the modularity of the DFM drive bay. The figure shows storage bay section's ability to fit in either the 21-inch chassis or 19-inch chassis variant.

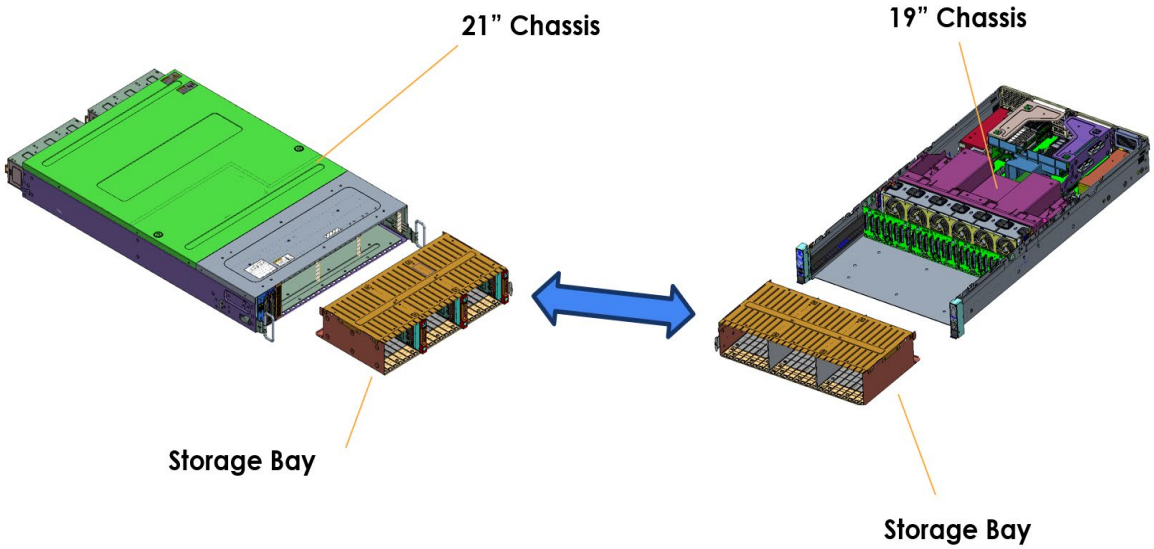


*Figure 7: Storage Bay Modularity Within a 2OU 21-inch and 2U 19-inch Chassis*

The 19-inch chassis variant and associated details are not in scope for this specification. An example 19-inch HW specification is shown in the figure below for illustration purposes.

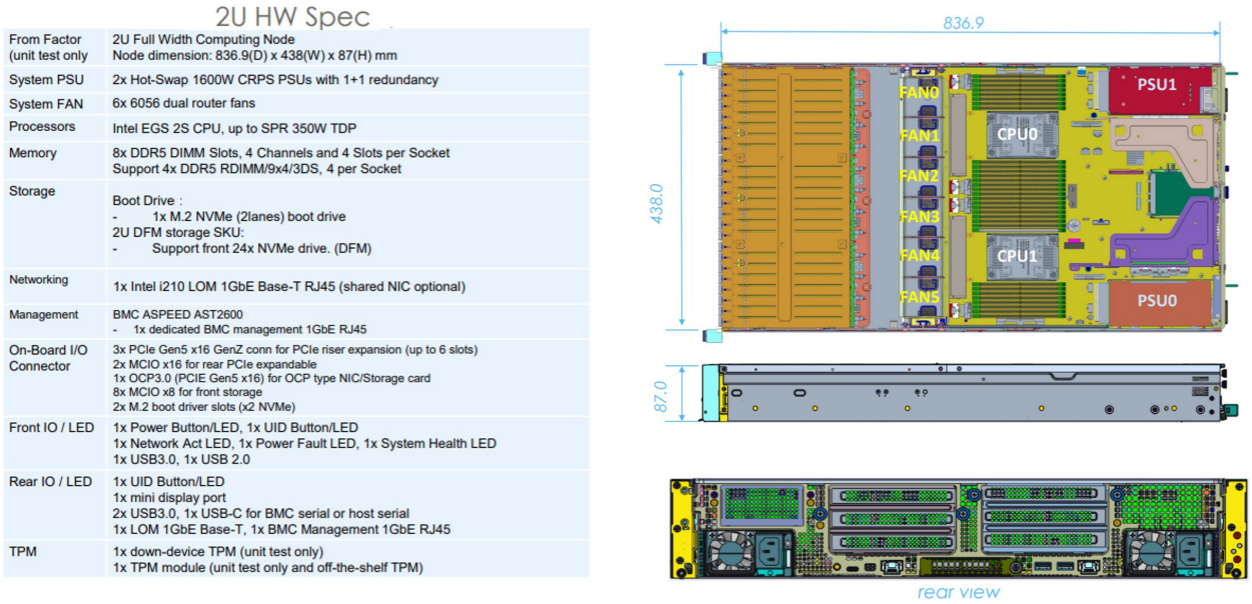

2U HW Spec

| | |
|---|---|
| From Factor (unit test only | 2U Full Width Computing Node<br>Node dimension: 836.9(D) x 438(W) x 87(H) mm |
| System PSU | 2x Hot-Swap 1600W CRPS PSUs with 1+1 redundancy |
| System FAN | 6x 6056 dual router fans |
| Processors | Intel EGS 2S CPU, up to SPR 350W TDP |
| Memory | 8x DDR5 DIMM Slots, 4 Channels and 4 Slots per Socket<br>Support 4x DDR5 RDIMM/9x4/3DS, 4 per Socket |
| Storage | Boot Drive :<br>- 1x M.2 NVMe (2lanes) boot drive<br>2U DFM storage SKU:<br>- Support front 24x NVMe drive. (DFM) |
| Networking | 1x Intel i210 LOM 1GbE Base-T RJ45 (shared NIC optional) |
| Management | BMC ASPEED AST2600<br>- 1x dedicated BMC management 1GbE RJ45 |
| On-Board I/O Connector | 3x PCIe Gen5 x16 GenZ conn for PCIe riser expansion (up to 6 slots)<br>2x MCIO x16 for rear PCIe expandable<br>1x OCP3.0 (PCIE Gen5 x16) for OCP type NIC/Storage card<br>8x MCIO x8 for front storage<br>2x M.2 boot driver slots (x2 NVMe) |
| Front IO / LED | 1x Power Button/LED, 1x UID Button/LED<br>1x Network Act LED, 1x Power Fault LED, 1x System Health LED<br>1x USB3.0, 1x USB 2.0 |
| Rear IO / LED | 1x UID Button/LED<br>1x mini display port<br>2x USB3.0, 1x USB-C for BMC serial or host serial<br>1x LOM 1GbE Base-T, 1x BMC Management 1GbE RJ45 |
| TPM | 1x down-device TPM (unit test only)<br>1x TPM module (unit test only and off-the-shelf TPM) |



*Figure 8: Example HW Specification for 2OU 19-inch Chassis Variant*

### 5.2.5. OCP NIC Flexibility

The two OCP3.0 NIC slots on the front of the chassis can accept either SFF or TSFF form factors within the same slot. The SFF form factor NIC cards utilize the pre-installed SFF adapter plate to fill the gap between a TSFF sized slot and an SFF sized slot.

The slot opening is designed for a TSFF NIC; however, the slot can be converted into a SFF slot with an adapter plate. This adapter can plate can be added or removed with a single screw. Figure 9 illustrates the SFF adapter plate prior to assembly to the front chassis.

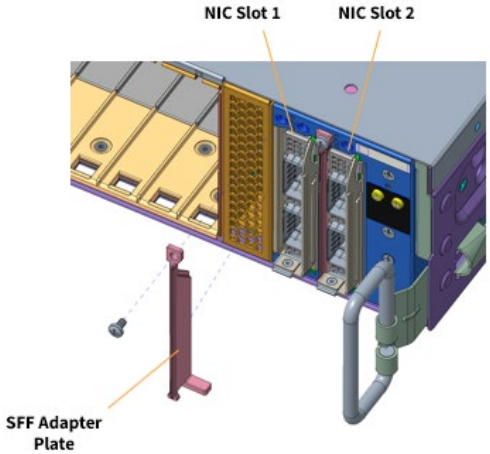


*Figure 9: SFF Adapter Plate*

### 5.2.6. Storage Bay Modularity

The storage carrier is capable of accommodating either a DFM) or 2.5-inch U.2 SSDs. Figure 10 illustrates this modularity.

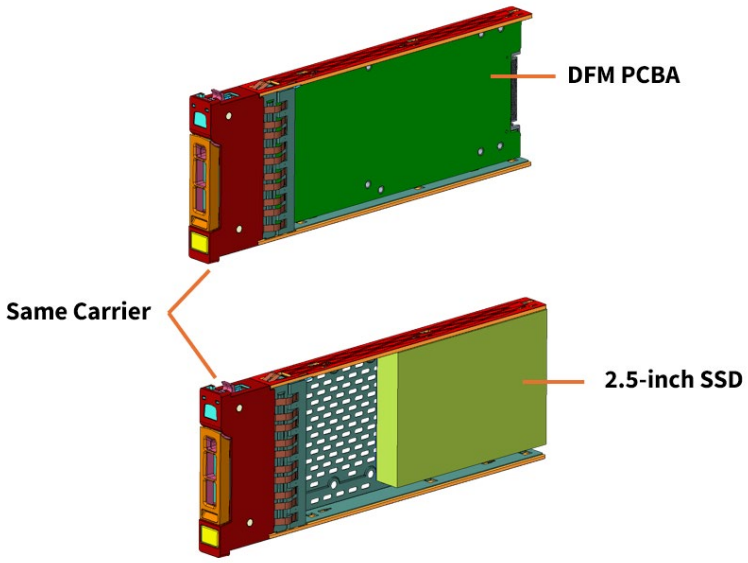


*Figure 10: Storage Drive Carrier Modularity*

## 5.3. System Requirements

The Endurance Storage System combines the HPM (Lone Star) with a U.2 Dual Board with two SSD U.2 drives, three Midplanes that support twenty-four U.2 DFM and/or SSD drives, a power distribution board (PDB) to convert infrastructure power, a Fan LED board, as well as two interposers boards that provide network interface (NIC) connectivity. The U.2 Dual Board, Midplanes, Fan LED boards are connected to the HPM and PDD through +12V power and MCIO cables as shown in the diagram below:

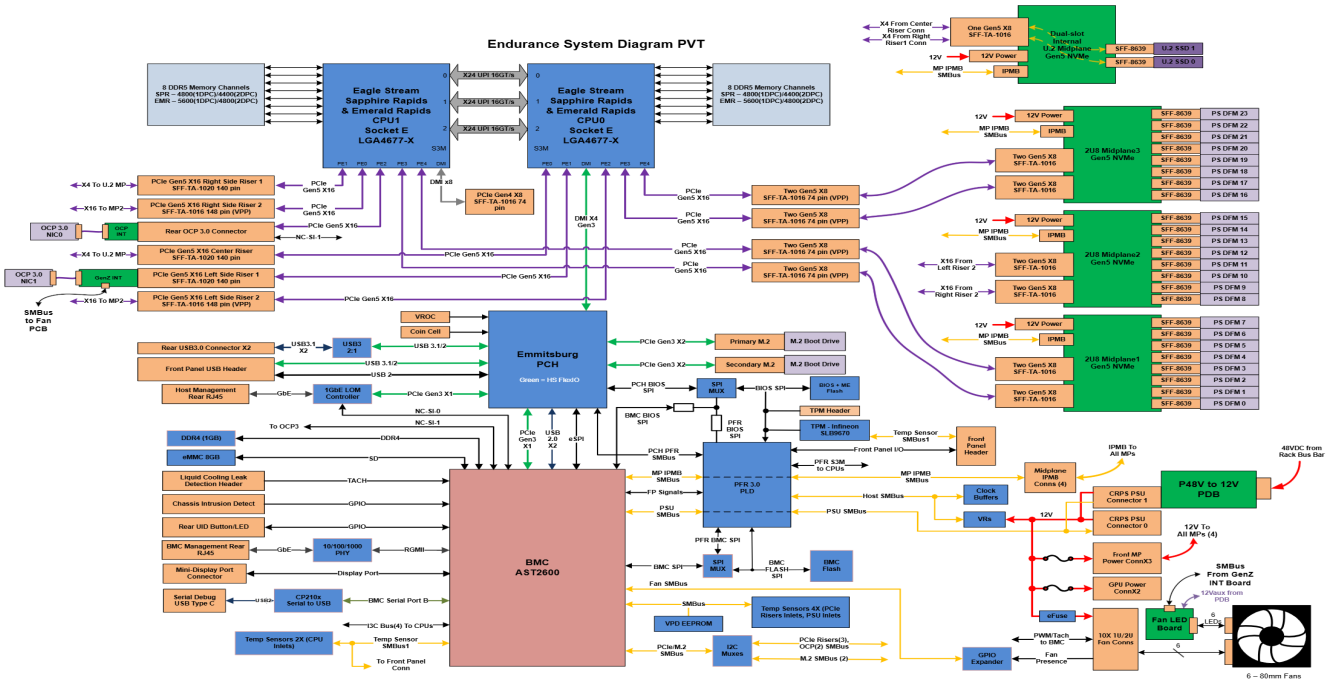


*Figure 11: System Block Diagram*

### 5.3.1. Host Processor Module (HPM)

The HPM is an Eagle Stream platform that supports two Sapphire or Emerald Rapids CPUs with a maximum of 16 DDR5 DIMMS - SPR:4800(1DPC)/4400(2DPC) and EMR:5600(1DPC)/4800(2DPC). Each CPU supports 72-lanes of PCIe5.0 and 8-lanes of PCIe4.0 for a total of four PCIe Gen5 x16 connectors, one 16-lane PCIe5.0 OCP3.0 NIC connector, and eight 8-lane PCIe5.0 x8 MCIO connectors. The single PCH system connectivity for front-panel USB and rear-panel RJ45 management connectors. The entire HPM is coordinated with a baseboard management controller (BMC) AST2600 that provides system connectivity via the front-panel USB/RJ45 connectors and LEDs.

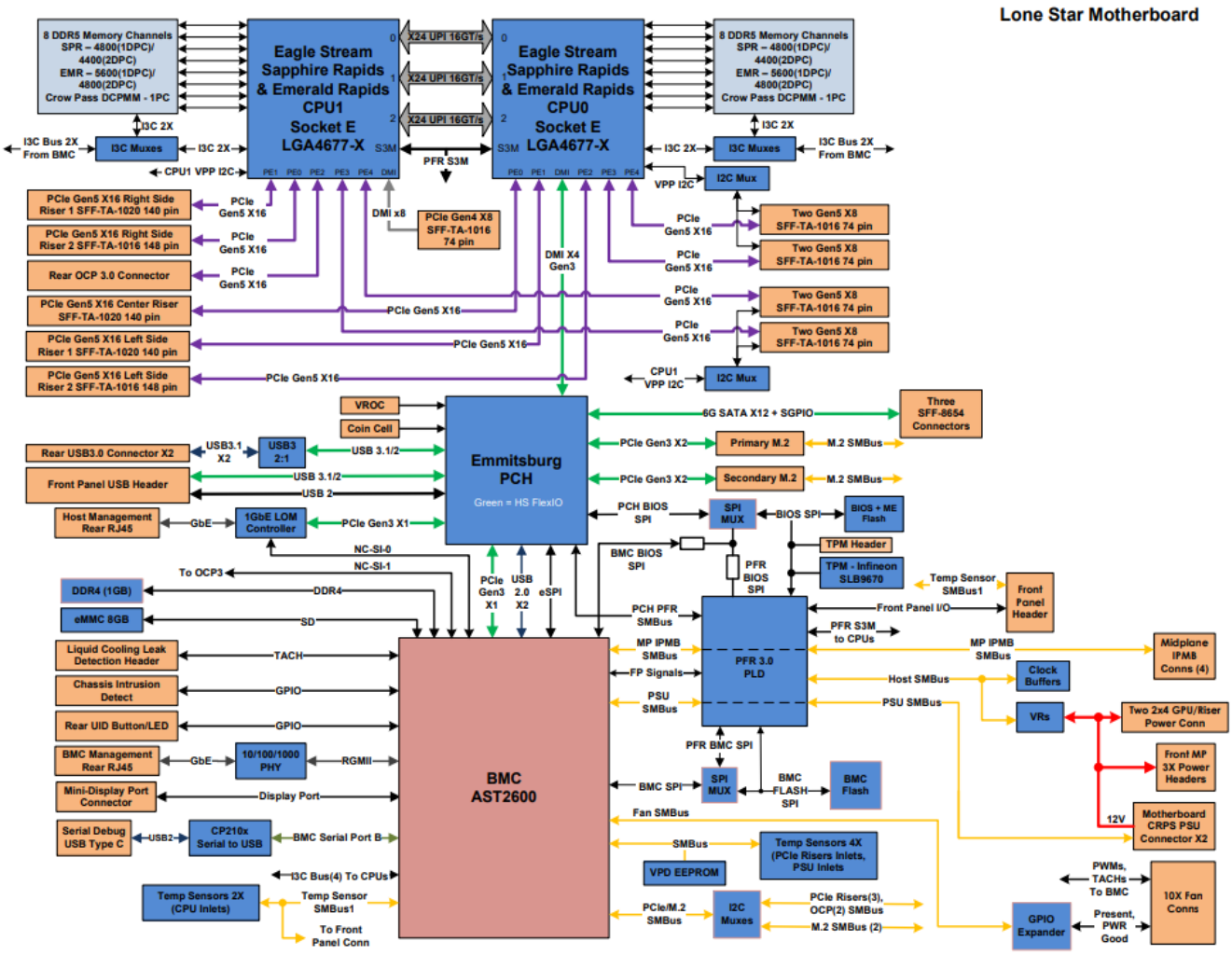


*Figure 12: HPM Block Diagram*

#### 5.3.1.1. HPM Component Placement

The following diagram displays the layout of the HPM. Each connector and major components are identified by number.

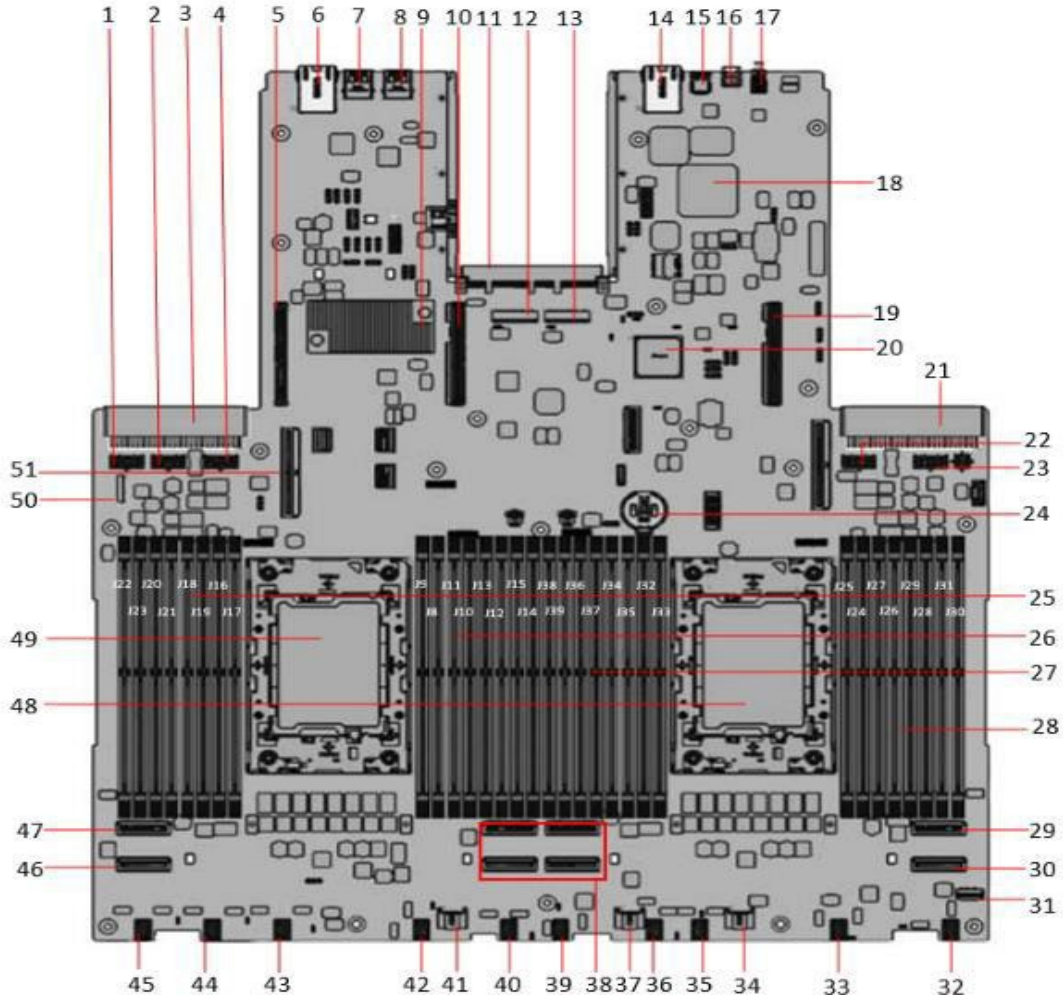


*Figure 13: Motherboard connectors and component locations*

| Function | Location |
|---|---|
| MP + 12V connector | J123 |
| MP + 12V connector | J120 |
| PSU1 Connector | J129 |
| CPU1 DDR5 DIMMs | J25, J24, J27, J26, J29, J28, J31, J30 (left to right) |
| MCIO connector x8 | J104 |
| MCIO connector x8 | J105 |
| Front ODP connector | J170 |
| Fan connector | J176 |

| Function | Location |
|---|---|
| Fan connector | J175 |
| IPMB connector | J125 |
| Fan connector | J114 |
| Fan connector | J113 |
| IPMB connector | J122 |
| 4x MCIO connector x8 | J100, J102, J101, J103 |
| Fan connector | J112 |
| Fan connector | J111 |
| IPMB connector | J121 |
| Fan connector | J110 |
| Fan connector | J109 |
| Fan connector | J108 |
| Fan connector | J107 |
| MCIO connector x8 | J99 |
| MCIO connector x8 | J98 |
| CPU1 | U7 |
| CPU0 | U1 |
| Front USB 2.0 connector | J106 |
| MCIO connector x16 | J88 |

*Table 2: System Board Details*

### 5.3.2. Power Distribution Board (PDB)

The Endurance Storage System is powered through the ORv3 48-52V bus bar and the HPM (Lone Star) is designed to accept 12V power through connectors that accept standard removable CRPS PSUs with gold finger connectors. The Power Distribution Board has been designed to convert the ORv3 48-52V bus-bar power to a traditional 12Volt power system via the same gold-finger connector arrangement of standard CRPS PSUs.

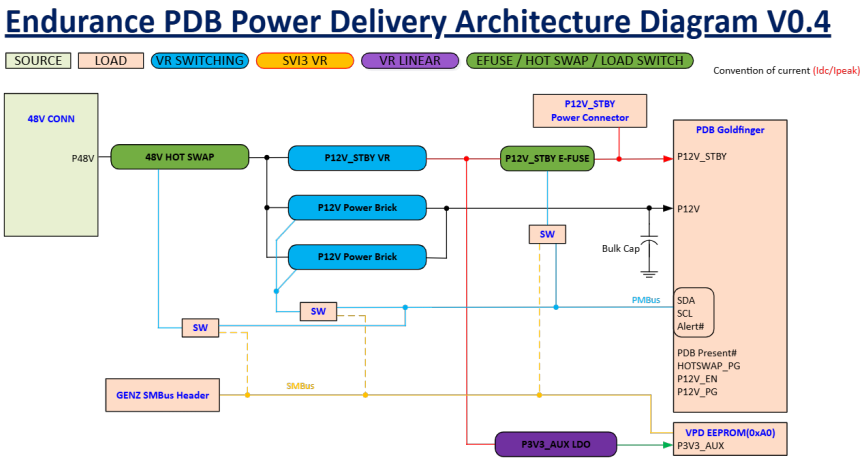


*Figure 14: Motherboard connectors and component locations*

#### 5.3.2.1. PDB Component Placement

The following diagram displays the layout of the PDB. Each connector and major component on the PDB are identified by number in the figure and table below:

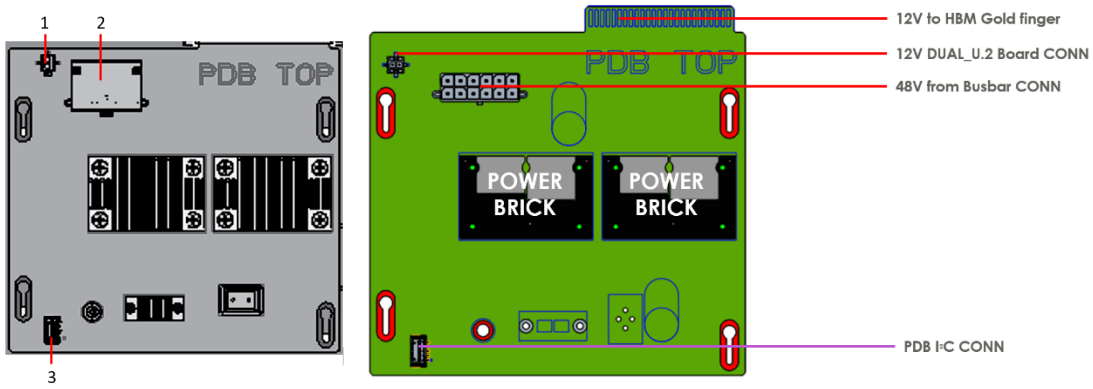


*Figure 15: PDB connectors and component locations*

| Item | Function | Location |
|---|---|---|
| 1 | 12v Power connector | J19 |
| 2 | 48v Power connector | J128 |
| 3 | IPMB connector | J31 |

*Table 3: PDB connector details*

### 5.3.3. Fan LED Board

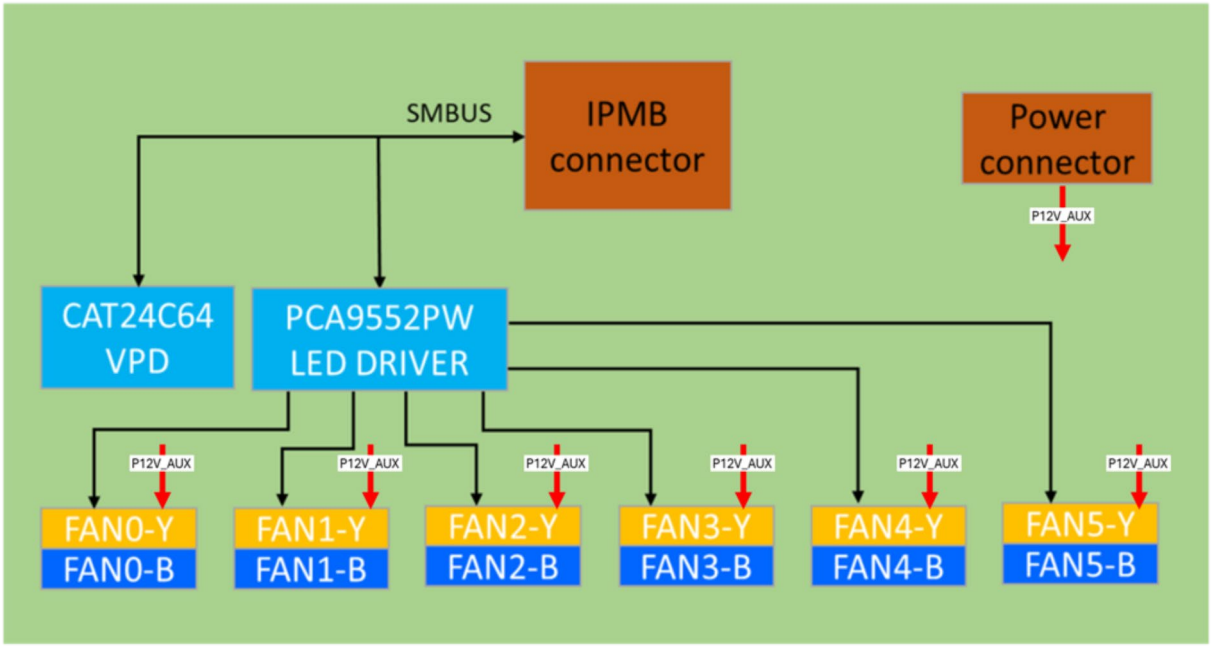


*Figure 16: PDB connectors and component locations*

#### 5.3.3.1. Fan LED Component Placement

The following diagram displays the layout of the Fan LED board. Each connector and major component on the Fan LED board are identified by number.




*Figure 17: Fan LED Board connectors and component locations*

| Item | Function | Location |
|---|---|---|
| 1 | 12v power connector | J19 |
| 2 | Fan board I2C connector | J1 |

*Table 4: Fan LED Board Details*

### 5.3.4. U.2 Dual Board

The U.2 Dual Board is designed to support two U.2 SSDs via three connectors: power connector, a single 8-lane PCIe MCIO cable connector, and IPMB configuration connector.

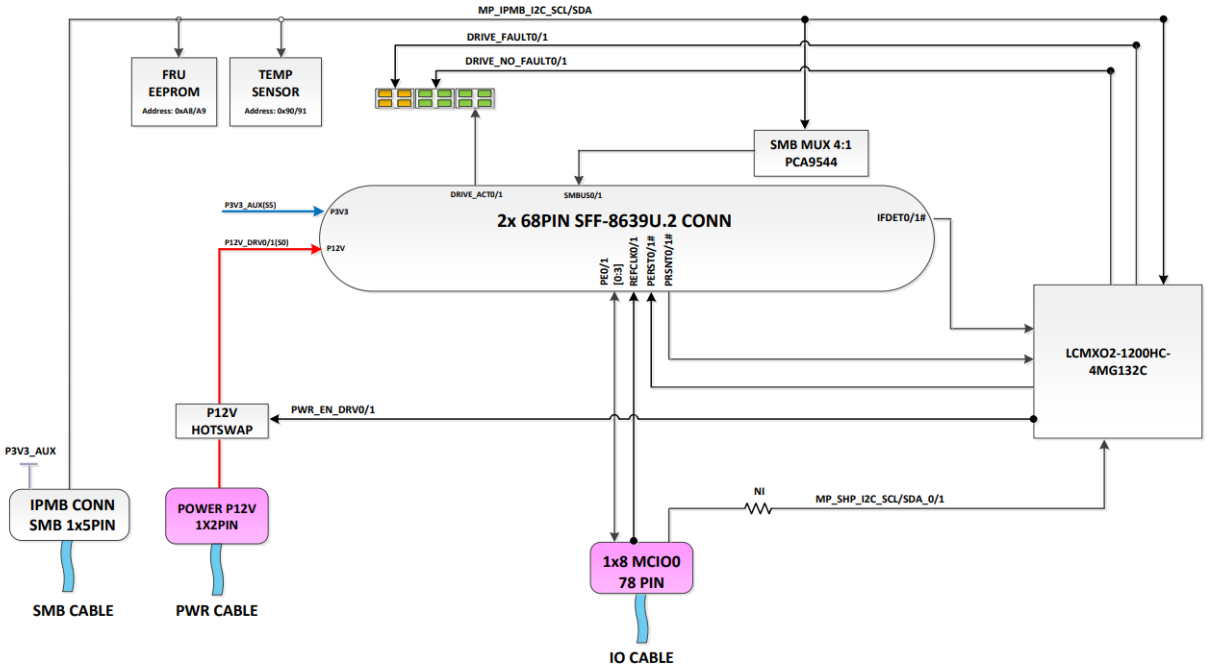


*Figure 18: U.2 Dual Board Block Diagram*

#### 5.3.4.1. U.2 Dual Board Component Placement

The following diagram displays the layout of the U.2 dual board. Each connector and major component is identified by number in the figure below.

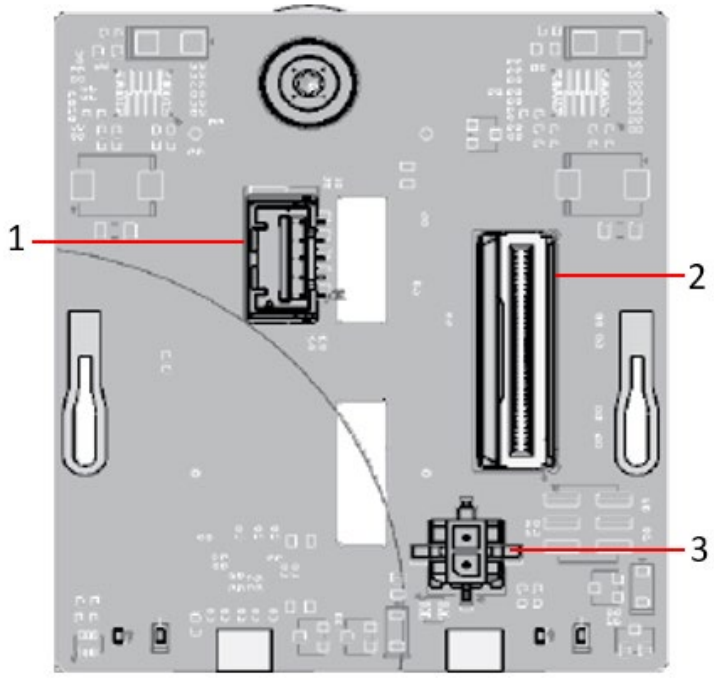


*Figure 19: U.2 Dual Board*

| Item | Function | Location |
|---|---|---|
| 1 | IPMB connector | J31 |
| 2 | MCIOx8 connector | J1 |
| 3 | Power connector | J19 |

*Table 5: U.2 Dual Board Details*

### 5.3.5. Midplane

The midplane supports eight U.2 DFM or SSD drives by providing 12V power, converting four MCIOx8 connectors into eight SFF-8639 connectors that each have 4-lanes of PCIe, and I2C configuration buses. The system includes three midplanes that sit orthogonally to all the other boards that allow for twenty-four U.2 DFMs or SSD drives in total. The midplane has nine apertures in the PCBA to allow for the maximum amount of airflow from front-to-back in the enclosure.

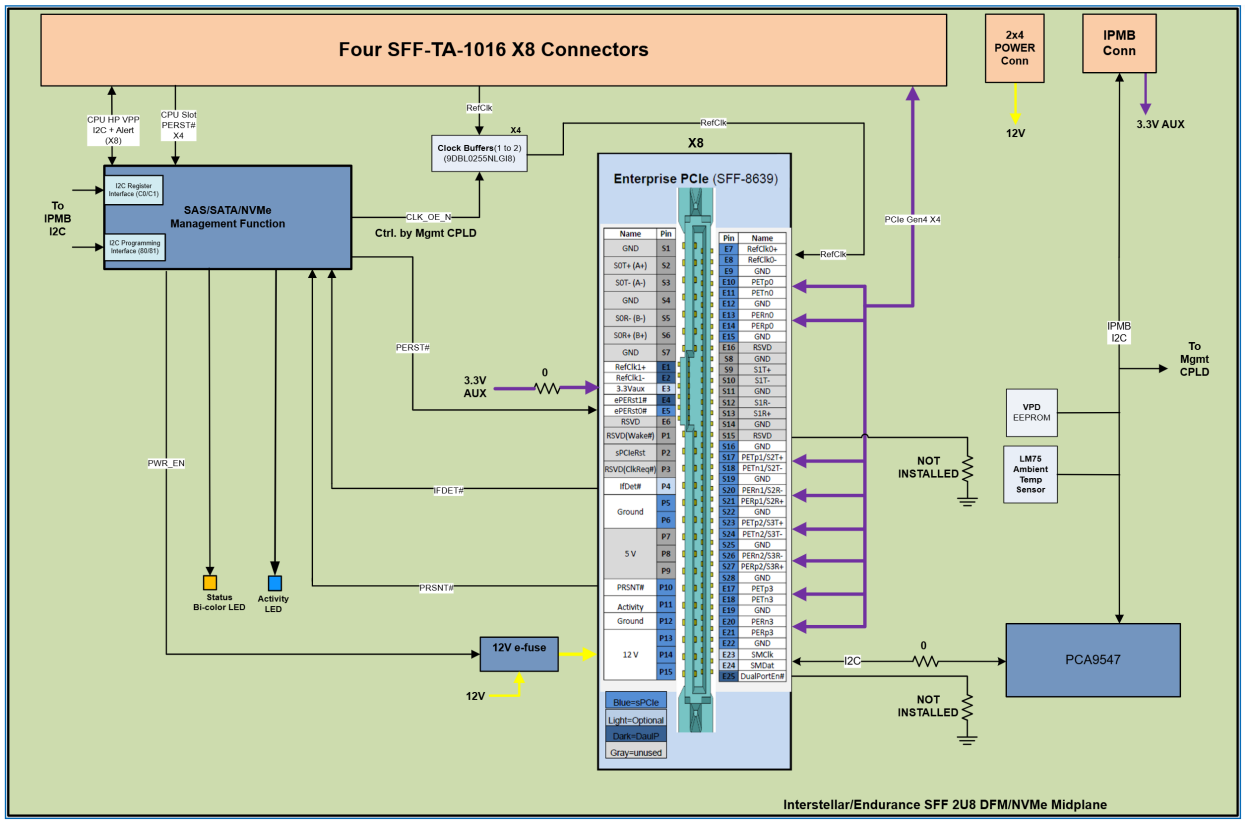


*Figure 20: Midplane Block Diagram*

#### 5.3.5.1. Midplane Component Placement

The following diagram displays the layout of a midplane. This server includes three midplanes that each support up to eight U.2 DFMs or SSD drives. Each connector and major component on the midplane are identified by number in the diagram and table below:

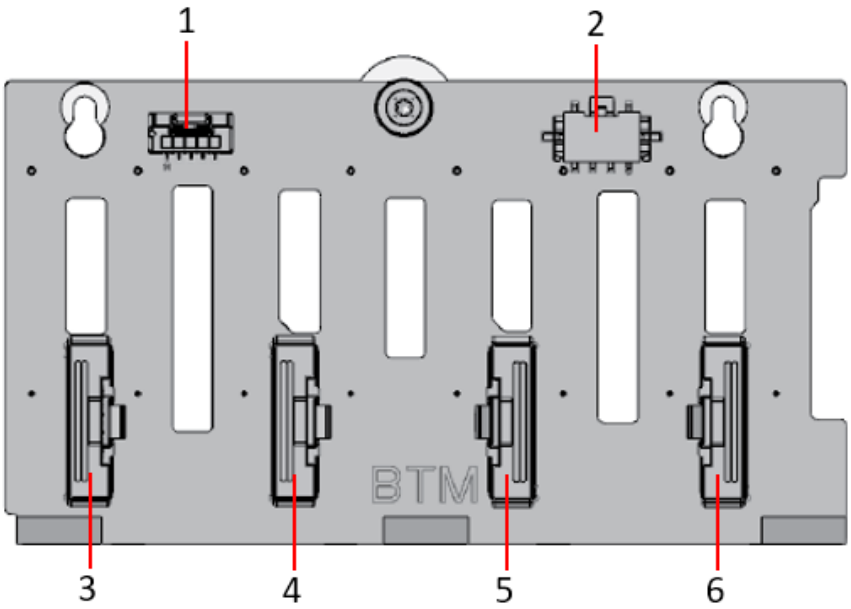


*Figure 21: Midplane connectors and component locations*

| Item | Function | Location |
|---|---|---|
| 1 | IPMB connector | J31 |
| 2 | Power connector | J19 |
| 3 | MCIOx8 connector | J26 |
| 4 | MCIOx8 connector | J25 |
| 5 | MCIOx8 connector | J2 |
| 6 | MCIOx8 connector | J1 |

*Table 6: Midplane Board Details*

## 5.4. Interposers

This system includes two interposers to provide dual SFF/TSFF OCP3.0 NICs on the front-panel. The OCP interposer plugs into the OCP3.0-compliant NIC connector on the HPM and connects to the first NIC via an MCIO x16 cable. The GenZ interposer plugs into a MCIOx16 connector on the HPM and connects to the second NIC via a different MCIO x16 cable.

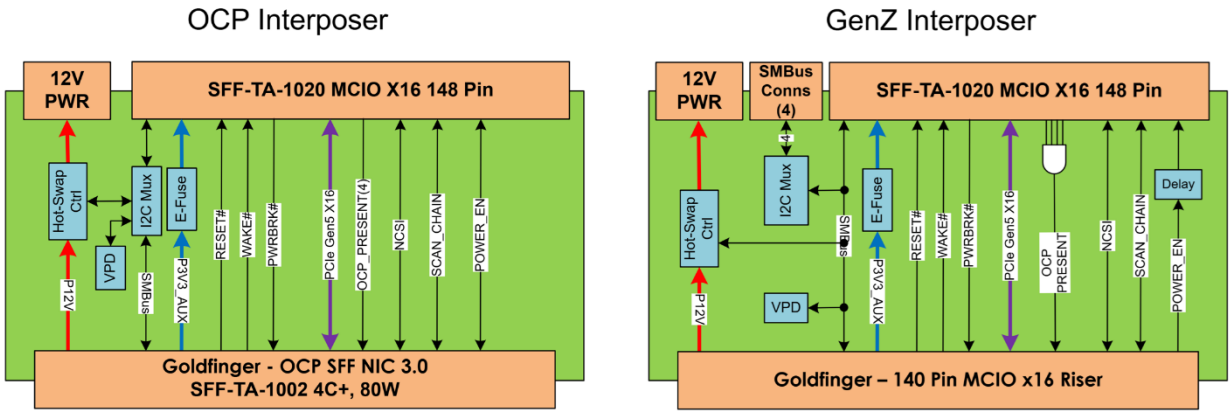


*Figure 22: Interposer Block Diagrams*

### 5.4.1. Interposer Connectors

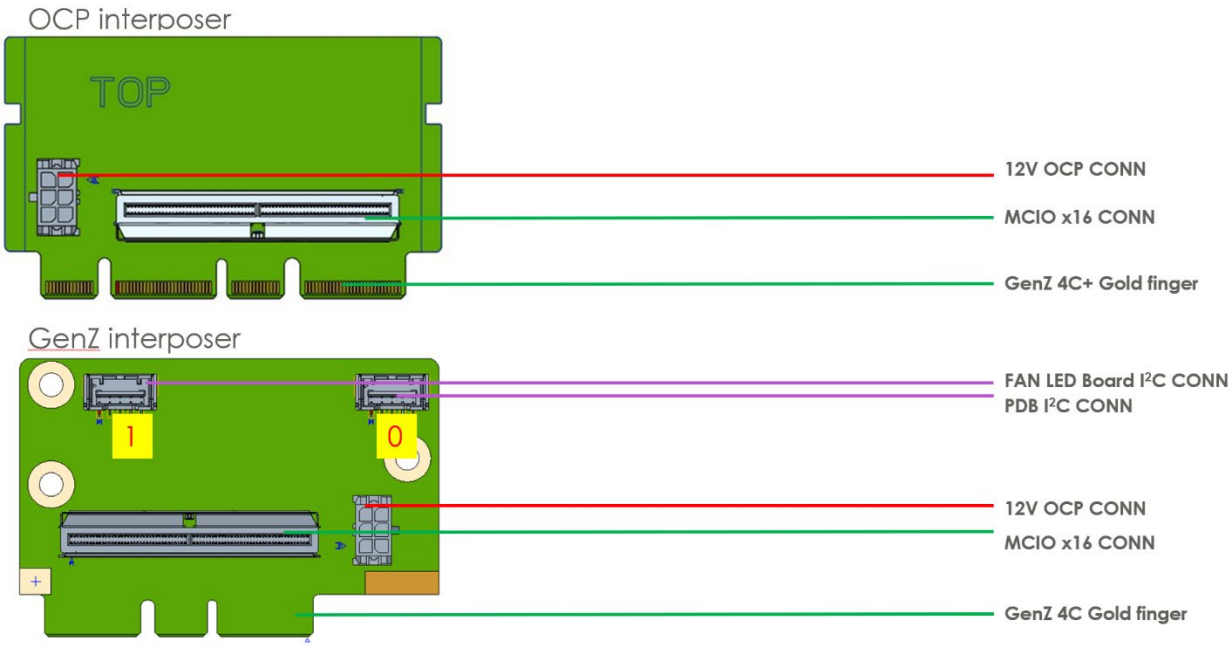


*Figure 23: Interposer Boards*

## 5.5. Cable Routing

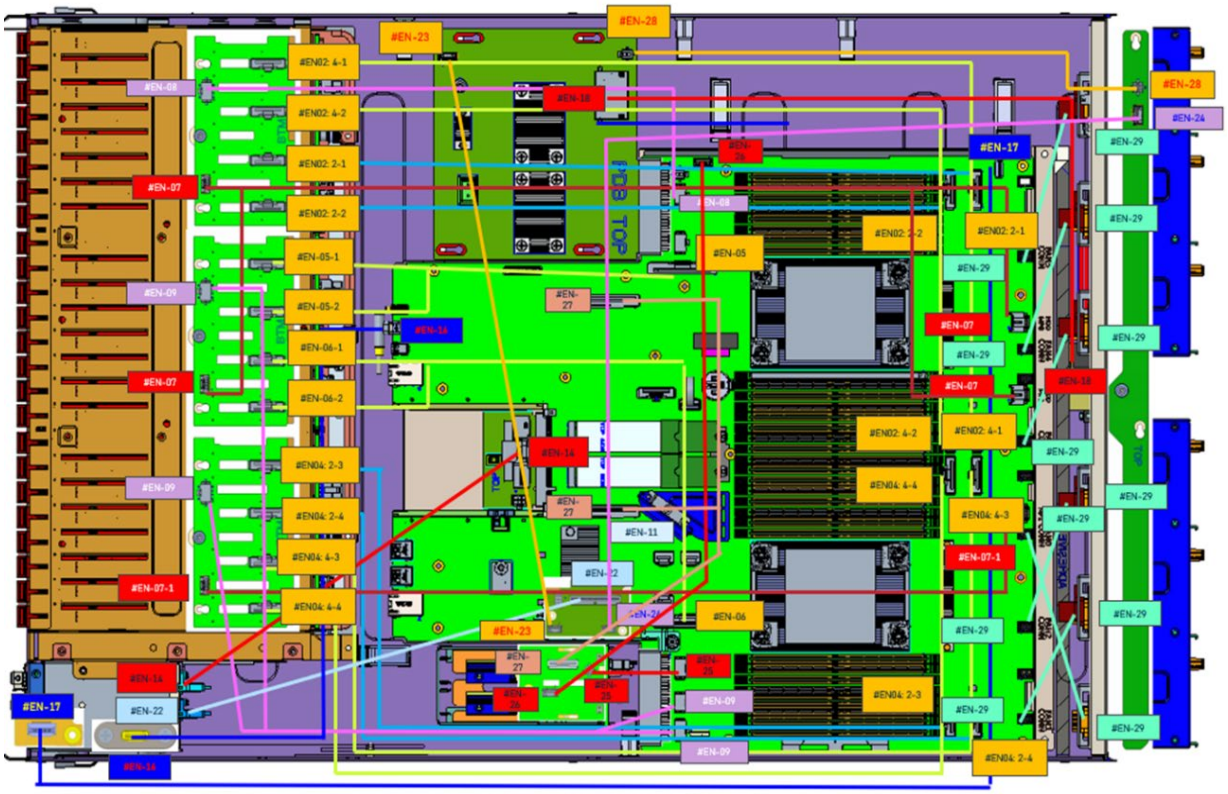

*Figure 24: Endurance Cable Routing*

| Item | Description |
|---|---|
| EN#02 | CBL,MCIOx8-NVMe,HDD0,4in1 |
| EN#04 | CBL,MCIOx8-NVMe,HDD2,4in1 |
| EN#05 | CBL,GenZ 4C X16 to MCIO X8*2,320L |
| EN#06 | CBL,GenZ 4C X16 to MCIO X8*2,360L |
| EN#07 | CBL,IPMB-CPLD,BINDING CABLE |
| EN# 7-1 | CBL,IPMB-CPLD,850L |
| EN#08 | CBL,MP 12V PWR,430L |
| EN#09 | CBL,MP 12V PWR,BINDING CABLE |
| EN#14 | CBL,MCIOX16-OCP,360L |
| EN#16 | CBL,TYPE C extension cord,485L |
| EN#17 | CBL,FFC CABLE,ODP,1700L |
| EN#18 | CBL,PDB-BUSBAR CABLE |
| EN#22 | CBL,MCIOX16-OCP,480L |
| EN#23 | CBL,PDB-GENZ,420L |
| EN#24 | CBL,FAN board-GENZ,785L |

| Item | Description |
|---|---|
| EN#25 | CBL,U2-MB,65L |
| EN#26 | CBL,IPMB-CPLD,480L |
| EN#27 | CBL,Gen-Zx16-MCIOX8,Y cable |
| EN#28 | CBL,MP 12V PWR,440L |
| EN#29 | CBL,Fan_MB,170L |
| | |
| | |
| | |
| | |
| | |
| | |
| | |
| | |
| | |
| | |

*Table 7: Endurance Cable Routing Details*

## 5.6. Thermal Design Requirements

This section outlines the thermal design requirements for the Endurance platform.
To meet thermal reliability requirements, the cooling solution should dissipate heat from the components when the system is operating up to its maximum thermal power.
The final thermal solution of the system should be most optimized and energy efficient under data center environmental conditions with the lowest capital and operating costs.
The thermal solution should not allow any overheating issue for any components in the system.
Endurance is designed for continuous operate at ASHRAE Class A2, 35°C, and extended to 35°C and 6000ft altitude. All rack mounted systems shall be designed to pull air in through the front face and exhaust the heated air at the rear. Front is defined as the forward most surfaces on a chassis, which could be a faceplate bezel and rear is the cable connection or service side. Heat transfer is not expected to occur through the sides or top/bottom of the system. Inlet venting is not allowed behind EIA flange. Exhaust venting may be used on the top and sides in the rear of the chassis

High level Endurance requirements:

- Test scenario: Full stress
- Test environment: 30C, sea level
    - Fan status: Fan healthy
    - 10 minutes service time window
- Test environment: 35C, 6000ft
    - One rotor failure
    - 7 minutes service time window

Additional Thermal requirements:

- CFM/W < 0.13
- Test scenario: Full stress
- Test environment: 30C, sea level
- Fan status: Fan healthy

For endurance, thermal acoustic test criteria are as follows:

- Rack level (L11)
- Sound pressure level < 80 dBA
- Microphones are 1 meter distance

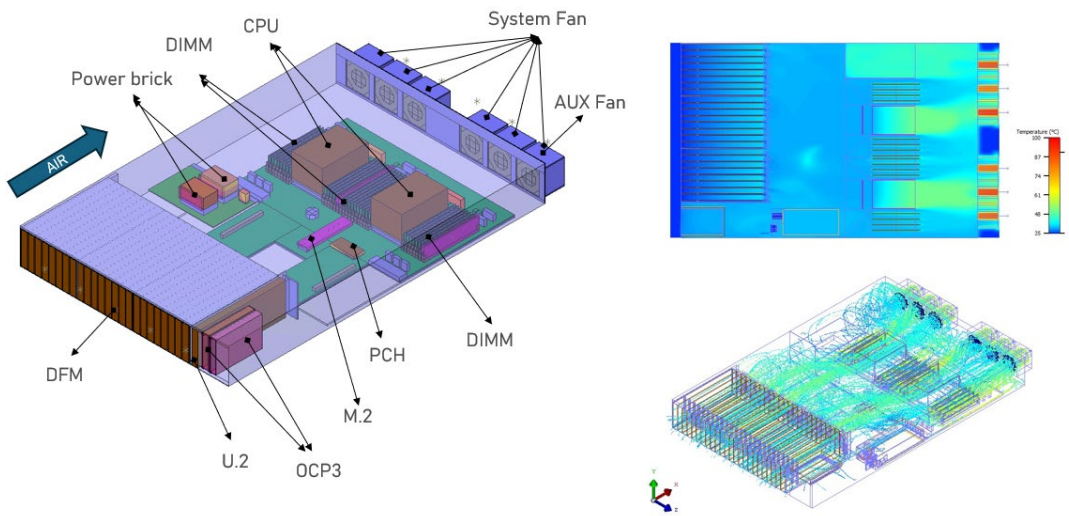


*Figure 25: Endurance CFD Modeling*

### 5.6.1. Thermal Kits

| Description | Details | Figure |
|---|---|---|
| **CPU Heatsink** | Dimension : 118(L)x78(W)x64(H)mm<br>Type: 2U<br>standard<br>Rca=0.082@40CFM | 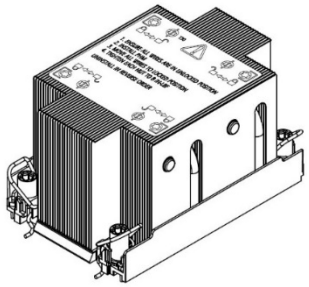 |
| **Fan** | Dimension : 56(L)x60(W)x60(H)mm<br>Type: Dual rotor fan<br>Max flow rate: 79.61 CFM<br>Max air pressure: 7.38 in $H_2O$<br>Maximum 20000 R.P.M. | 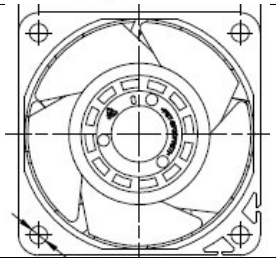 |
| **CPU VR Heatsink** | Dimension : 78.6(L)x10(W)x25(H)mm<br>AL Extrusion<br>Push pin | 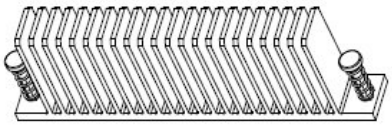 |

| Description | Details | Figure |
|---|---|---|
| **Power Brick Heatsink** | Dimension :59(L)x37(W)x26(H)mm<br>AL Extrusion<br>Spring screw | 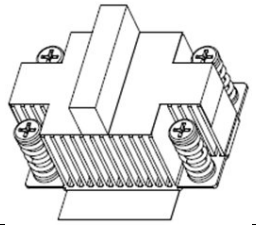 |
| **P12V_STBY VR Heatsink** | Dimension : 17.2(L)x11(W)x20(H)mm<br>AL Extrusion<br>Push pin | 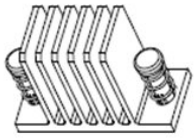 |
| **Air Shroud** | CPU and DIMM air shroud | 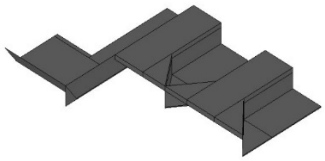 |

*Table 8: Endurance Thermal Kits*

## 5.7. System LEDs

This section gives an overview of the various LEDs and buttons within the Endurance system.
LED indicators are constrained to the following three behaviors:

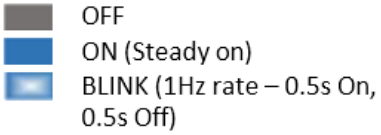


**Note:** The blue LED graphic only serves as an example.

### 5.7.1. Operator Display Panel (ODP)

The operator display panel is located on the front of the server. The figure below provides more detail on the ODP LED states.

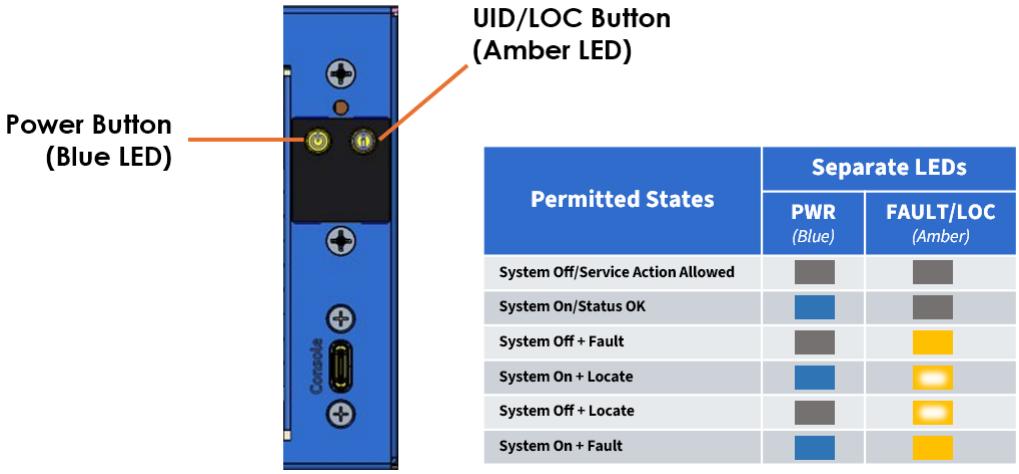


| Permitted States | Separate LEDs | |
|---|---|---|
| | PWR *(Blue)* | FAULT/LOC *(Amber)* |
| System Off/Service Action Allowed | | |
| System On/Status OK | | |
| System Off + Fault | | |
| System On + Locate | | |
| System Off + Locate | | |
| System On + Fault | | |

*Figure 26: ODP Panel Detail*

| System Behavior |
|---|
| **Blue LED**<br>**OFF:** There is no DC power to the server.<br>**On:** DC Power is on and power is supplied to all components.<br>**Button:**<br>• Press button to activate system power.<br>• Press and hold the power button for 4 seconds to power down system. |
| **Amber LED**<br>**Off:** All modules are present and operating normally.<br>**Blinking:** Unit selected for identification/locate function.<br>**Steady On:** Triggered a fault status indicating that one or more modules (e.g., Fans, Drives, etc.) have a fault, alarm condition, are absent, or have a DC power on failure.<br>**Button:**<br>• Press button once to activate the Amber LED blinking and indicator.<br>• Press again to turn off LED. |

### 5.7.2. Drive LEDs

Figure 27 below displays the front panel of the system. Each DFM NVMe drive is mounted in a drive carrier with a push-button lever for quick installation and removal. Each populated disk drive carrier has an LED display that indicates the activity and link status of the disk drive.

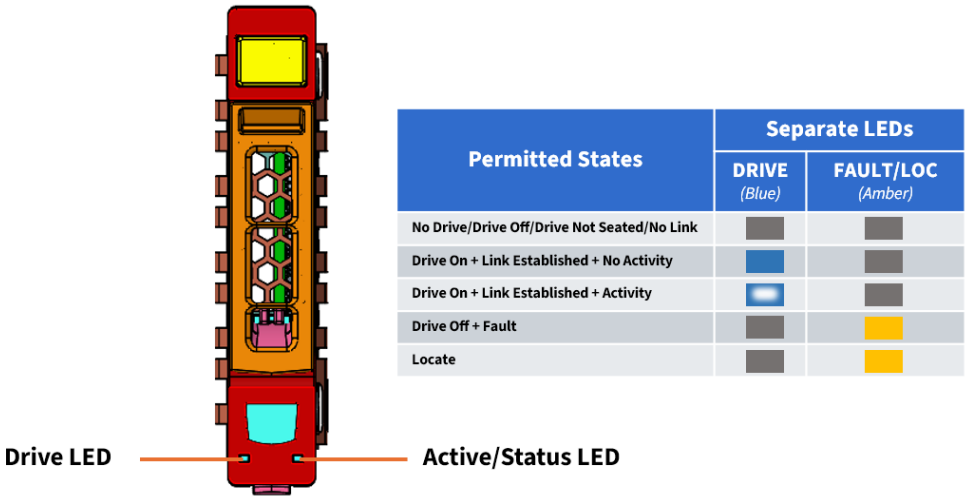


| Permitted States | Separate LEDs | |
|---|---|---|
| | DRIVE *(Blue)* | FAULT/LOC *(Amber)* |
| No Drive/Drive Off/Drive Not Seated/No Link | | |
| Drive On + Link Established + No Activity | | |
| Drive On + Link Established + Activity | | |
| Drive Off + Fault | | |
| Locate | | |

*Figure 27: Fan LEDs*