OPEN Compute Project

.

Title: Open edge RMC

Author: Tomi Männikkö, Nokia

Version History

Note, refer to the OCP Contribution Versions, Revisions and Errata best practices documentation. Generally speaking, Versions and revisions are made to this document and logged here. Errata is a separate document such that the contribution specification document it refers to was not revised. Ex: Version 1, Errata E1

Date	**Version #**	**Author**	**Description**
Dec 3, 2019	0.2	T. Männikkö	Draft for review
Jan 18, 2021	1.0	T. Männikkö	Approved

Current Template Version:

Specification Errata Template v1.0.0

Effective January 2024

Table of Contents

Version History 2

Current Template Version: 2

1. License 4

2. Acknowledgements 4

3. Scope 4

4. Errata 5

4.1. Issue 1 5

1.1. Issue 2 5

Appendix A - Checklist for Steering Committee (SC) 6

Final approval of this Errata Specification (to be completed by contributor(s) of the referred specification and/or the associated project leaders.) 6

1. License

Contributions to this document are made under the terms and conditions set forth in Open Compute Project Contribution License Agreement (“OCP CLA”) (“Contribution License”) submitted by the contributors of the original specification to which this refers. .

NOTWITHSTANDING THE FOREGOING LICENSES, THIS SPECIFICATION IS PROVIDED BY OCP "AS IS" AND OCP EXPRESSLY DISCLAIMS ANY WARRANTIES (EXPRESS, IMPLIED, OR OTHERWISE), INCLUDING IMPLIED WARRANTIES OF MERCHANTABILITY, NON-INFRINGEMENT, FITNESS FOR A PARTICULAR PURPOSE, OR TITLE, RELATED TO THE SPECIFICATION. NOTICE IS HEREBY GIVEN, THAT OTHER RIGHTS NOT GRANTED AS SET FORTH ABOVE, INCLUDING WITHOUT LIMITATION, RIGHTS OF THIRD PARTIES WHO DID NOT EXECUTE THE ABOVE LICENSES, MAY BE IMPLICATED BY THE IMPLEMENTATION OF OR COMPLIANCE WITH THIS SPECIFICATION. OCP IS NOT RESPONSIBLE FOR IDENTIFYING RIGHTS FOR WHICH A LICENSE MAY BE REQUIRED IN ORDER TO IMPLEMENT THIS SPECIFICATION. THE ENTIRE RISK AS TO IMPLEMENTING OR OTHERWISE USING THE SPECIFICATION IS ASSUMED BY YOU. IN NO EVENT WILL OCP BE LIABLE TO YOU FOR ANY MONETARY DAMAGES WITH RESPECT TO ANY CLAIMS RELATED TO, OR ARISING OUT OF YOUR USE OF THIS SPECIFICATION, INCLUDING BUT NOT LIMITED TO ANY LIABILITY FOR LOST PROFITS OR ANY CONSEQUENTIAL, INCIDENTAL, INDIRECT, SPECIAL OR PUNITIVE DAMAGES OF ANY CHARACTER FROM ANY CAUSES OF ACTION OF ANY KIND WITH RESPECT TO THIS SPECIFICATION, WHETHER BASED ON BREACH OF CONTRACT, TORT (INCLUDING NEGLIGENCE), OR OTHERWISE, AND EVEN IF OCP HAS BEEN ADVISED OF THE POSSIBILITY OF SUCH DAMAGE.

2. Acknowledgements

3. Scope

The purpose of this template is to provide corrections to the following document:

Open edge RMC, specification v0.2
(Note this document was accidentally uploaded as Rev 0.2 when it was supposed to have been uploaded as Rev 1.0)

4. Errata

4.1. Issue 1

The revision was not updated from 0.2 to 1.0 by mistake when the document was officially approved and uploaded to the contribution database.
This is visible on the cover page and “Revision history” as “Revision 0.2”

In the corrected document the revision is corrected to “Revision 1.0”.

1.1. Issue 2

The description of the CVE-2019-6260 vulnerability was not included in the document.

The corrected document (Revision 1.0) contains the description as “Appendix C - CVE-2019-6260 vulnerability”.

Open edge RMC

Revision 1.0

Author: Tomi Männikkö, Nokia

1 License (OCP CLA Option)

Contributions to this Specification are made under the terms and conditions set forth in **Open Compute Project Contribution License Agreement ("OCP CLA") ("**Contribution License") by:
Nokia Solutions and Networks OY

You can review the signed copies of the applicable Contributor License(s) for this Specification on the OCP website at http://www.opencompute.org/products/specsanddesign

Usage of this Specification is governed by the terms and conditions set forth in **Open Compute Project Hardware License – Permissive ("OCPHL Permissive"), ("Specification License").**

You can review the applicable Specification License(s) executed by the above referenced contributors to this Specification on the OCP website at http://www.opencompute.org/participate/legal-documents/

NOTWITHSTANDING THE FOREGOING LICENSES, THIS SPECIFICATION IS PROVIDED BY OCP "AS IS" AND OCP EXPRESSLY DISCLAIMS ANY WARRANTIES (EXPRESS, IMPLIED, OR OTHERWISE), INCLUDING IMPLIED WARRANTIES OF MERCHANTABILITY, NON-INFRINGEMENT, FITNESS FOR A PARTICULAR PURPOSE, OR TITLE, RELATED TO THE SPECIFICATION. NOTICE IS HEREBY GIVEN, THAT OTHER RIGHTS NOT GRANTED AS SET FORTH ABOVE, INCLUDING WITHOUT LIMITATION, RIGHTS OF THIRD PARTIES WHO DID NOT EXECUTE THE ABOVE LICENSES, MAY BE IMPLICATED BY THE IMPLEMENTATION OF OR COMPLIANCE WITH THIS SPECIFICATION. OCP IS NOT RESPONSIBLE FOR IDENTIFYING RIGHTS FOR WHICH A LICENSE MAY BE REQUIRED IN ORDER TO IMPLEMENT THIS SPECIFICATION. THE ENTIRE RISK AS TO IMPLEMENTING OR OTHERWISE USING THE SPECIFICATION IS ASSUMED BY YOU. IN NO EVENT WILL OCP BE LIABLE TO YOU FOR ANY MONETARY DAMAGES WITH RESPECT TO ANY CLAIMS RELATED TO, OR ARISING OUT OF YOUR USE OF THIS SPECIFICATION, INCLUDING BUT NOT LIMITED TO ANY LIABILITY FOR LOST PROFITS OR ANY CONSEQUENTIAL, INCIDENTAL, INDIRECT, SPECIAL OR PUNITIVE DAMAGES OF ANY CHARACTER FROM ANY CAUSES OF ACTION OF ANY KIND WITH RESPECT TO THIS SPECIFICATION, WHETHER BASED ON BREACH OF CONTRACT, TORT (INCLUDING NEGLIGENCE), OR OTHERWISE, AND EVEN IF OCP HAS BEEN ADVISED OF THE POSSIBILITY OF SUCH DAMAGE.

Revision history

Revision	Editor	Description
V0.1 (Nov 30, 2019)	T. Männikkö	First draft
V0.2 (Dec 3, 2019)	T. Männikkö	Draft for review
V1.0 (Jan 18, 2021)	T. Männikkö	Approved

References

[1] Open edge chassis specification
http://files.opencompute.org/oc/public.php?service=files&t=14f2dd0ce7533e070e38ec077d7a4f72&download

[2] Open edge server specification
http://files.opencompute.org/oc/public.php?service=files&t=3e9592bad04e28742669d1958fad20e7&download

Contents

1 License (OCP CLA Option) 2
2 Open edge overview 5
3 Open edge RMC 10
3.1 Description of the HW 10
3.1.1 Processor and memory 11
3.1.2 USB debug interface 11
3.1.3 SMBUS 11
3.1.4 ID button and status LEDs 11
3.1.5 Management switch 11
3.1.6 Power consumption and cooling 12
3.1.7 Printed circuit board 12
3.2 PSU HW management 13
3.3 RMC to SLED interface 14
3.4 Air flow control 15
3.5 RMC mechanics 16
3.6 RMC connector interface 16
4 Environmental and regulatory specifications 20
Appendix A - backplane connector interface 21
Appendix B - power supply connector interface 25
Appendix C - CVE-2019-6260 vulnerability 27

2 Open edge overview

This document describes the technical specifications of the Open edge RMC. Open edge is a compact, high-performance server platform optimized for installation to edge sites, where facilities are limited in floor space, cooling capacity and power feed capacity. This document focuses on the hardware implementation of the RMC.

This chapter describes the key features of Open edge HW and provides an overview of the platform. Open edge chassis is described in more detail in *Open edge chassis specification,* [1]. More information on Open edge server sleds can be found in *Open edge server specification*, [2].

An Open edge chassis supports up to 5 1RU, half width sleds that can have various of functions, for example servers, gateways, JBODs etc. Also, 2RU sleds are supported. Chassis management connectivity (to sleds, PSUs) is done in a centralized manner through a rack management controller unit (RMC), via backplane. Another key function of the backplane is to feed power to the sleds, via the power distribution board.

The Open edge chassis is shown in Figure 1. All operations are done at the front side of the chassis. All units (PSUs, RMC, sleds) are inserted and removed from the front. All interfaces are also in the front.

Figure 2 illustrates Open edge 1U and 2U server sleds. Open edge RMC is shown in Figure 3.

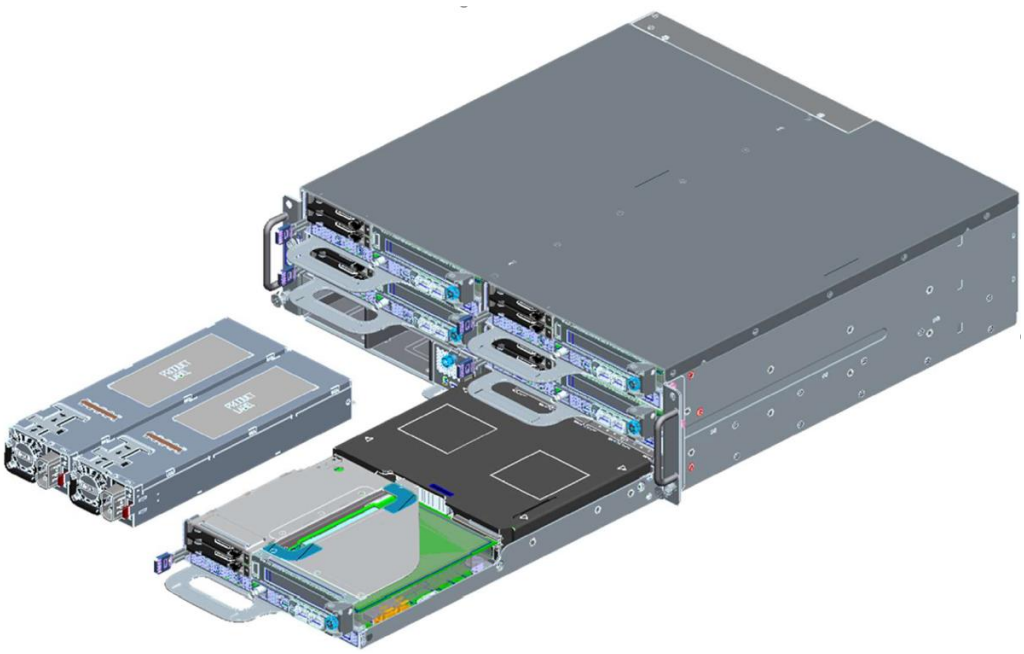

Figure 1 Open edge 3U chassis

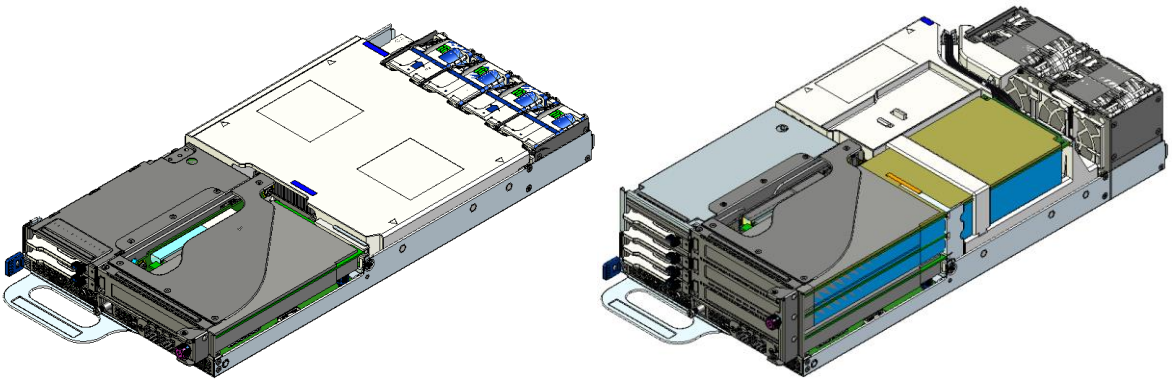

Figure 2 Open edge server sleds, 1U (left) and 2U (right)

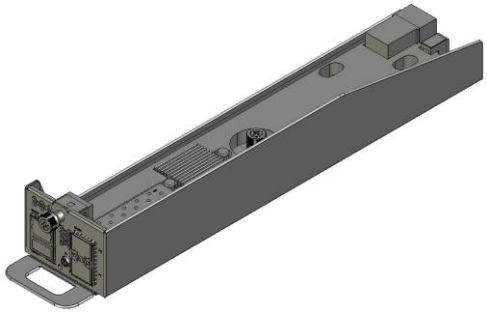

Figure 3 Open edge RMC

The block diagram of Open edge chassis is shown in Figure 4. Power supplies (PSUs) connect to the system through a power distribution board (PDB). Sleds are connected through a backplane (BP). A rack management controller (RMC) has the task of managing the PSUs and providing management Ethernet connectivity to the sleds.

.

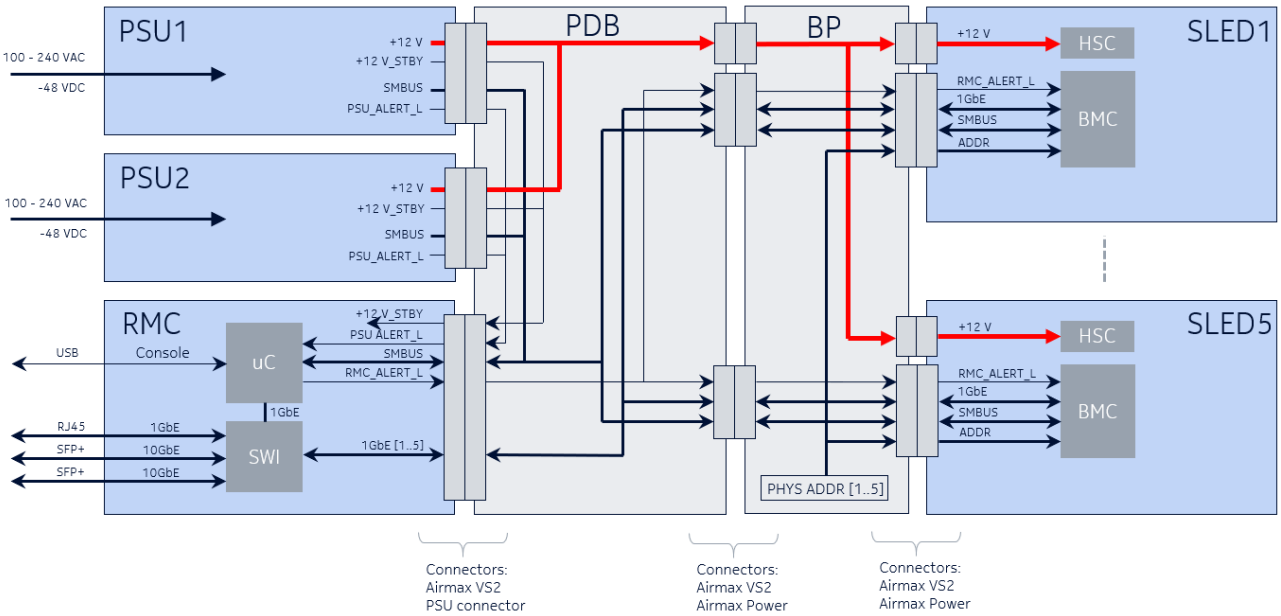

Figure 4 Block diagram of Open edge chassis

Each sled has a hard-coded physical address [1...5] assigned to it through the backplane connector. The key specifications of Open edge chassis and sleds are shown in Table 2.

Open edge chassis mechanical design is simple, consisting of only few components. The power distribution board, backplane assembly and mounting brackets are attached to a steel enclosure. A complete chassis assembly is shown in Figure 5.

The rear wall of the chassis is perforated to allow front-to-rear or rear-to-front cooling air flow. For rack installation, a shelf is needed. The front mounting brackets alone are not capable of carrying the entire weight of a fully populated chassis. A dedicated, adjustable sliding shelf is available for installation the Open edge chassis into a standard 19” rack, but a generic L-bracket is also usable.

The outer dimensions of the chassis are shown in Table 1.

Table 1 Outer dimensions of the Open edge chassis

	Dimension
Height	130.55 mm
Width	440 mm
Depth	430 mm

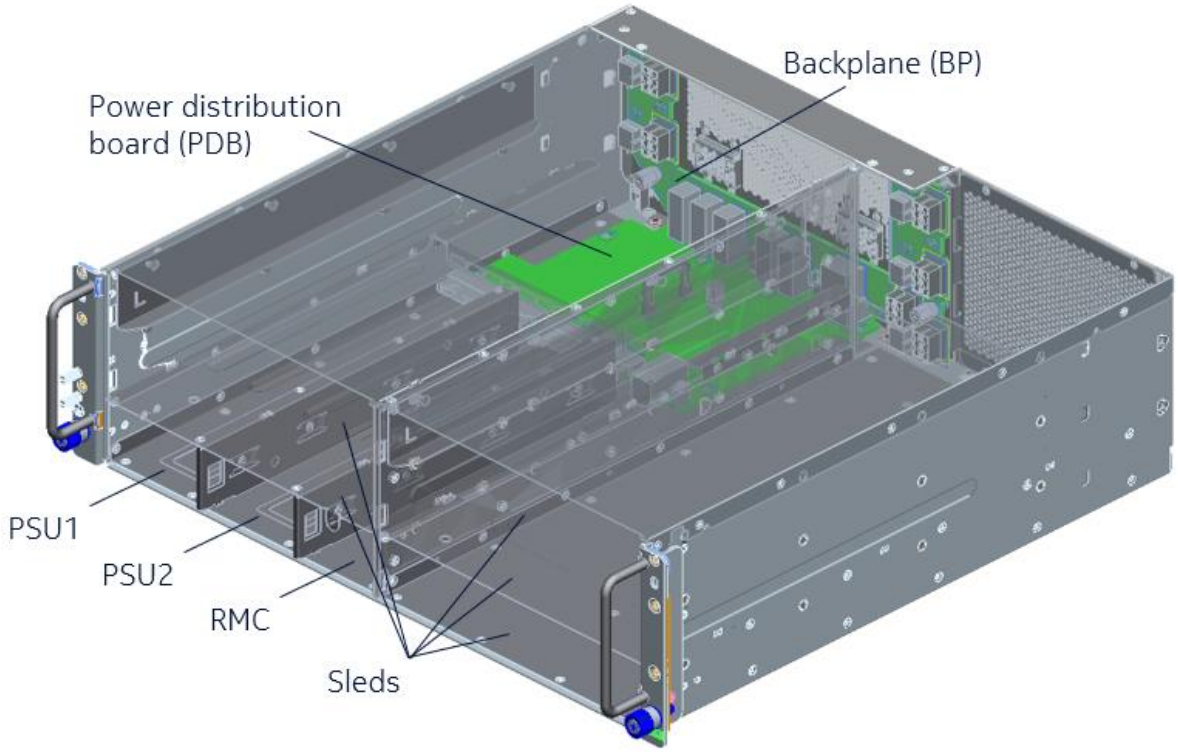

Figure 5 Open edge chassis with power distribution board and backplane

The Open edge 3U chassis supports two types of sleds, 1U and 2U. One 2U sled can be installed in place of two 1U sleds in the upper locations. 1U sleds in the top row have support brackets on the inner sides of the chassis. When a 2U sled is installed, the support brackets are removed. Removal and installation are tool-les.

Examples of mixed configurations of 1U and 2U sleds in an Open edge 3U chassis are shown in Figure 6 and Figure 7. Physical addresses of the sled locations are also shown.

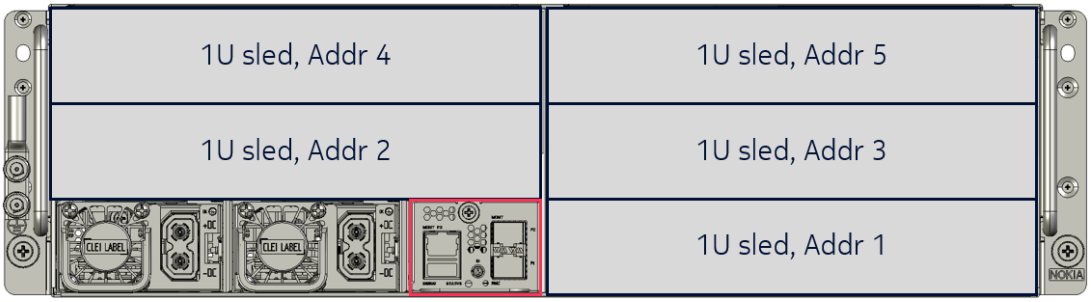

Figure 6 Open edge chassis with five 1U sleds

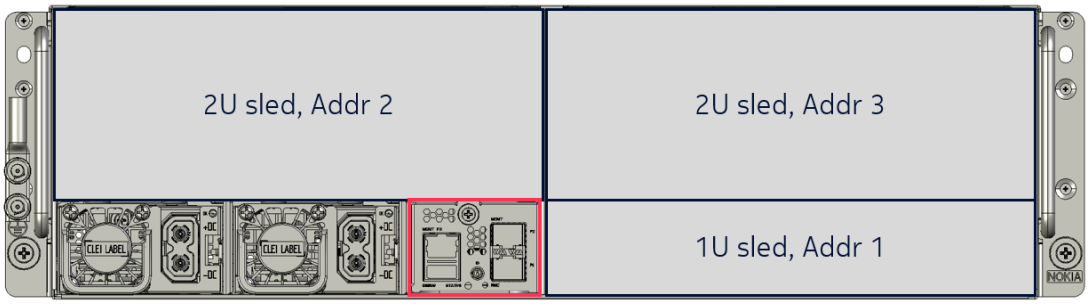

Figure 7 Open edge chassis with one 1U sled and two 2U sleds

For an empty 1U slot in the chassis, a filler sled is used. The purpose of the filler sled is to act as an EMI shield, serve as an air blocker for the server sled below and to provide protection against fire spread.

Power supplies are in bottom left corner of the chassis. The RMC module is located next to the power supplies, highlighted with red in Figure 6 and Figure 7.

Table 2 Key specifications of Open edge chassis

Technical specifications	
Form factor	3U, 19” rackmount
Server sled bays	Possible server configurations • 5 x 1U sled • 1 x 2U sled + 3 x 1U sled • 2 x 2U sled + 1 x 1U sled

Power supply	Dual, high efficiency, 1+1 redundant, hot-plug PSUs.
	Available PSU options
	• 230 VAC, 80+ platinum
	  ○ operating voltage range 180 VAC…264 VAC, output power 2000 W,
	  ○ operating voltage range 90 VAC…140 VAC, output power 1000 W
	• -48 VDC, 80+ platinum
	  ○ operating voltage range -40…-72 VDC, output power 2000 W

Sled power feed capacity	400 W max (1U sled), 700 W max (2U sled)
Cooling	Autonomous fan units on sleds and PSUs, reversible air flow

HW management (RMC)	Integrated HW management controller (AST2520) supporting
	• Ethernet interface for chassis management
	  ○ 2 x 10 Gbit/s (SFP+) and 1 x 1 Gbit/s (RJ45) front panel interfaces for uplinks or chaining multiple chassis
	  ○ 1 Gbit/s management Ethernet interface to RMC and all sleds via backplane
	• USB serial port for debug
	• Redfish, IPMI

Operating conditions	Chassis, PSUs, RMC: • Operating temperature range: -5 C …+45 C [ETSI EN300 019-1-3 Class 3.2] • Short term operating temperature: -5 C to +55 C [GR-63-CORE] • Non-operating temperature *): -25 C to +70 C • Operating humidity: 5 % to 95 % • Non-operating humidity *): 10 % to 100 % • System startup temperature: min +5 C *) Non-operating means conditions during transportation and storage (device is in its transportation package)
Weight	9.2 kg (empty chassis)
Dimensions	440 mm x 130.55 mm x 430 (W x H x D)

3 Open edge RMC

HW management functions of Open edge chassis are performed via the rack management controller (RMC) unit. The main task of RMC is to manage the power supply units. In addition, RMC provides management Ethernet connectivity to all sleds via a single interface.

Other than providing Ethernet connectivity, RMC is not involved in HW management of sleds. Instead, it is the responsibility of a higher layer datacentre management software entity.

RMC is hot-swappable. In case the RMC is removed during a maintenance operation, PSUs and all sleds will continue to operate normally.

This document describes examples for functionality of HW, e.g. I/O signals, LEDs and push-buttons. Actual functionality of the unit is defined by the used SW implementation.

3.1 Description of the HW

The following chapters describe the HW implementation of RMC. The block diagram is shown in Figure 8.

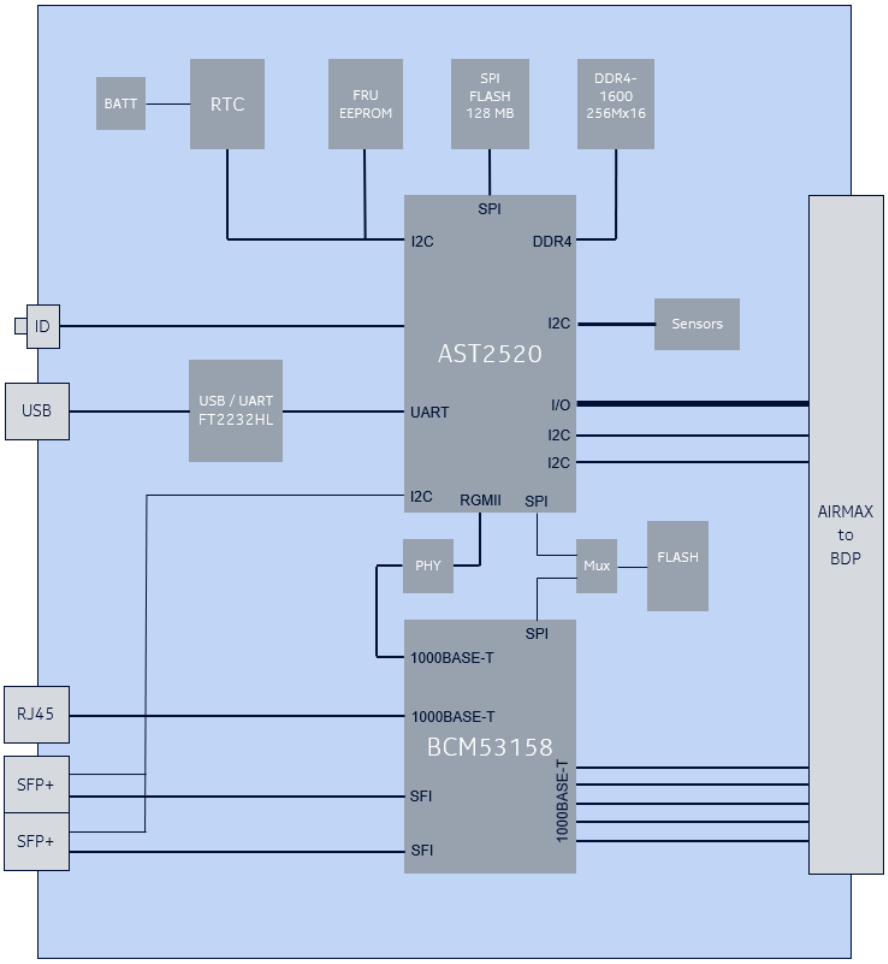

Figure 8 Block diagram of RMC

3.1.1 Processor and memory

Open edge RMC is built around AST2520 server management processor, featuring an 800MHz ARM11 core, DDR4 memory, numerous GPIO pins, ADCs and serial buses.

A 4 Gbit DDR4-1600 memory device is used for RAM of the AST2520. The memory is organized as 256M x 16 bit. A 128 MB SPI flash device is used as local storage.

3.1.2 USB debug interface

A USB type A debug port is provided in the front panel, connecting to a serial port of the AST2520 through a USB to UART converter (FT2232HL). The USB interface provides a convenient way to connect a laptop to the RMC for debugging and field-maintenance purposes. The serial port appears in the laptop as regular COM port.

3.1.3 SMBUS

There are two system level SMBUSes used in the AST2520, one connecting to power supplies (SMB_PMBUS) and the other connecting to BMCs of sleds (SMB_SLED).

Multiple local SMBUSes are used for connecting to onboard sensors, FRU EEPROM and a real-time clock.

3.1.4 ID button and status LEDs

An ID button in the front panel can be used for identifying a unit in the field, to datacentre management software. Also, datacentre management software can activate a blue LED in the ID button in order to pinpoint a unit in the field, e.g. for servicing.

There is a status LED for indicating general state of the unit (e.g. faults, critical events) and an RMC heartbeat LED for indicating the operational state of the unit (ready, not ready).

3.1.5 Management switch

The switch on the RMC is an un-managed, layer-2, low-power, low cost switch (BCM53158) that provides hardware management connectivity to the Open edge chassis through the front panel. Its purpose is to simplify external HW management connectivity and reduce cabling, possibly rendering an external management switch needless.

A 1000BASE-T copper interface is provided in the front panel for convenient connection to a laptop or a nearby site switch. Two SFP+ cages for optical modules are supported for long-haul connections. These two interfaces can also be used for daisy-chaining multiple Open edge chassis together. The status of the SFP+ modules can be monitored by AST2520.

Ethernet connectivity to the sleds, through the backplane, is also 1000BASE-T. Magnetics are required on the sleds.

Port assignment of the switch is shown in Table 3.

Table 3 Port assignment of BCM53158

Switch port		Connectivity
1000BASE-T	Port 0	Sled 1
	Port 1	Sled 2
	Port 2	Sled 3
	Port 3	Sled 4
	Port 4	Sled 5
	Port 5	RMC
	Port 6	Front panel RJ45 (P3), 10/100/1000 Mbit/s
	Port 7	Not used
10 G (SFI)	Port 12	Front panel SFP+ (P1), 10 Gbit/s only
	Port 13	Front panel SFP+ (P2), 10 Gbit/s only

At powerup the BCM53158 loads its configuration from an external SPI flash. The flash can be field-programmed by the AST2520, in case the switch configuration needs to be updated.

3.1.6 Power consumption and cooling

Power consumption of Open edge RMC is approximately 10 W. Due to low power consumption, the RMC does not have a fan of its own.

3.1.7 Printed circuit board

The specification of the 6-layer printed circuit board is shown in Figure 9.

STACKUP												
						Target Z (ohms) - MicroStrip	50	Breakout	85		Breakout	
						Target Z (ohms) - StripLine	50		85			
						Z tolerance	±10%		±10%			
						Z Type	Single	Single	Differential		Differential	
Layer#	Description	Copper Weight (oz)	Thickness (mil)	Tolerance (mil)	Glass Fabric	Er	Width	Width	Width	Space	Width	Space
	Soldermask		0.60			3.8						
1	TOP	0.5+plating	1.95				4	4	4.9	7.1	3.9	4.1
	PP		2.70	±0.709	1080x1	3.8						
2	GND	1	1.30									
	CORE		8.00	±1.5	2116x2	3.8						
3	VCC	1	1.30									
	PP		32.00	±3.94	Vendor Define	4.2						
4	VCC1	1	1.30									
	CORE		8.00	±1.5	2116x2	3.8						
5	GND1	1	1.30									
	PP		2.70	±0.709	1080x1	3.8						
6	BOTTOM	0.5+plating	1.95				4	4	4.9	7.1	3.9	4.1
	Soldermask		0.60			3.8						
		Total	63.70	±10%								

Figure 9 PCB stack up of Open edge RMC

3.2 PSU HW management

The open edge server chassis provides a redundant power feed (1+1, 2N). Both AC and DC power supplies are supported. PSUs are dimensioned such that if one power feed or PSU fails, the remaining PSU can feed all power to the chassis.

There are PSU variants for front-to-rear air flow and rear-to-front air flow. The selection is made based on site cooling requirements. The primary direction of air flow is from front to rear. If the airflow direction is from rear to front, the handles of the PSU should be red to clearly identify this.

One of the key tasks of RMC is to manage power supplies. These management tasks include monitoring the health of the PSUs and reading the parameters like voltage, current, power etc.

Interfaces between RMC and the PSUs and their key functions are listed below:

- **+12V_standby**: Standby power output of PSUs, used to power RMC
- **PWROK**: Power OK signal from PSUs to RMC
- **SMBUS** for RMC to PSU communication
    - Detection of PSU presence
    - Detection of PSU type
    - Detection of PSU redundancy
    - Reading sensors, e.g. input/output voltage/current, power, temperature, fan speed
    - Control of PSU operating modes, e.g. enter/exit stand-by mode
    - Firmware upgrades
- **ALERT**: PSU interrupt to RMC for indicating e.g. changed status

A high-level block diagram of RMC and the connectivity between RMC and PSUs is shown in Figure 10.

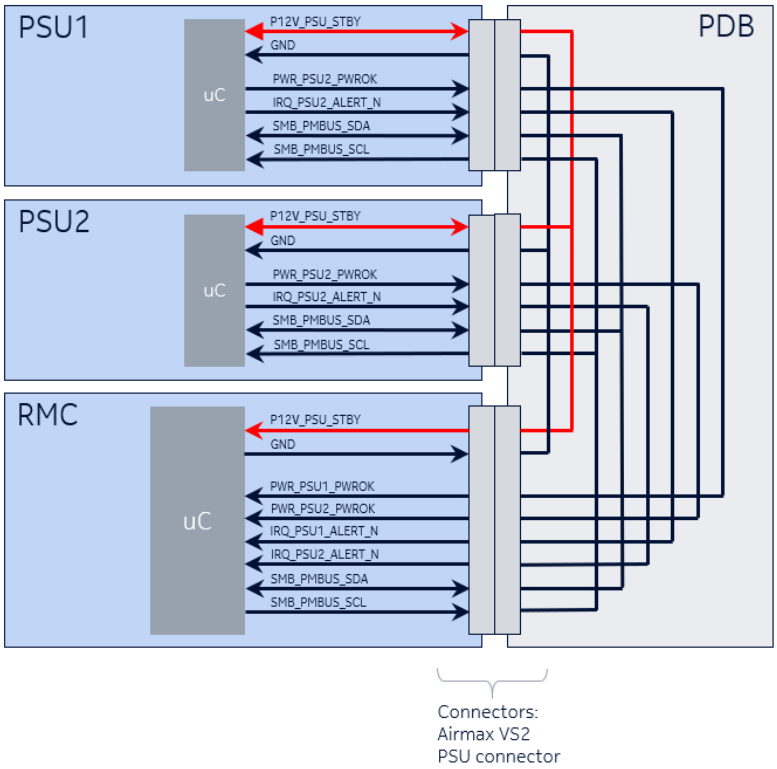

Figure 10 PSU management connectivity

3.3 RMC to SLED interface

RMC provides a HW interface to the sleds, but the responsibility of the management function lies elsewhere in the system. The RMC contains an unmanaged Ethernet switch that provides connectivity from the front panel to the BMC of all sleds and the processor of RMC.

There is also an SMBUS interface from RMC's microcontroller to the sleds that could act as a backup connection or it could be used for simple housekeeping tasks in case the sled has no BMC. In addition, there are few I/O pins connected from RMC to sleds for future use.

The interfaces between RMC and the sleds and their key functions are listed below:

- **Management Ethernet** (1000BASE-T):
  - External HW management connection to sleds via RMC front panel
- **GPIO[2:0]**:
  - Current use: indicate PSU1/2 presence and their air flow direction to sleds. Based on this information sleds can check that their own air flow direction is aligned and possibly raise an alarm and/or remain in stand-by mode in case of a conflict
- **SMBUS** for RMC to BMC communication
  - Can be used as a secondary communication channel towards sleds, e.g. in case the sled does not have a BMC or Ethernet connectivity
- **RMC_ALERT**:
  - indicates of a possible PSU problem to sleds, e.g. a fault or combination of low voltage and high temperature, in which case the sled may need to reduce its power consumption by throttling
- **SLED_PRESENT** info to RMC

- **BMC_READY** info to RMC

A high-level block diagram of RMC and the connectivity between RMC and sleds is shown in Figure 11.

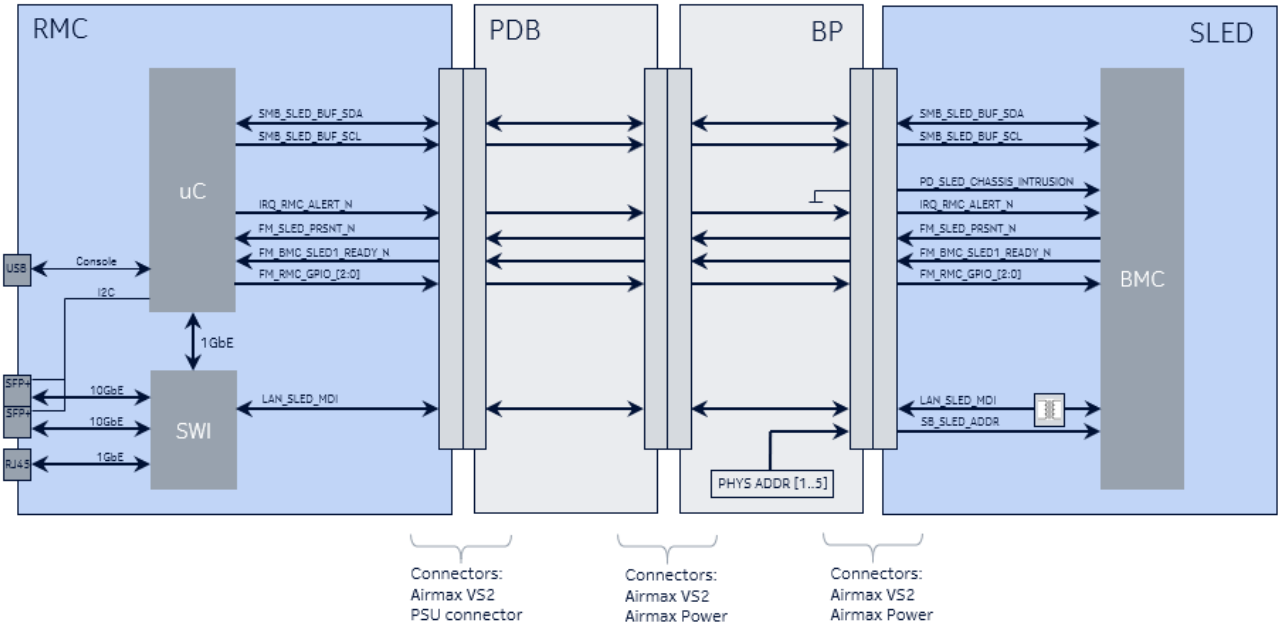

Figure 11 3.3 RMC to SLED interface

In larger systems, multiple chassis can be chained together using the dual 10 Gbit/s Ethernet ports in the RMC front panel. This provides an alternative to using an external HW management switch to implement the required connectivity.

3.4 Air flow control

The open edge chassis supports both front-to-rear and rear-to-front cooling. The chassis does not have fans, instead fans are integrated on sleds and PSUs. Depending on the site installation requirements, e.g. concerning hot/cold isle arrangements of the equipment room, the direction of cooling air through the Open edge chassis may need to be configured to be either from front to rear or from rear to front.

Air flow direction of a chassis, including PSUs and sleds, is typically selectable as a factory option, in which case airflow within the chassis is well under control. Air flow direction can also be determined by visual inspection of the hardware. In case the system is built of units having mixed airflows, RMC together with BMCs can detect that, for example using the signals GPIO[2:0]. In such case sleds may opt to remain in standby mode and generate an event to the system management entity.

3.5 RMC mechanics

The RMC consists of the circuit board and a metal enclosure. The RMC is located on the right side of the PSUs, connecting to the power distribution board (PDB). RMC is secured to the Open edge chassis using a thumb screw.

The outer dimensions of the RMC are shown in Table 4.

Table 4 Outer dimensions of the RMC

	Dimension, max
Height	41 mm
Width	58 mm
Depth	270 mm

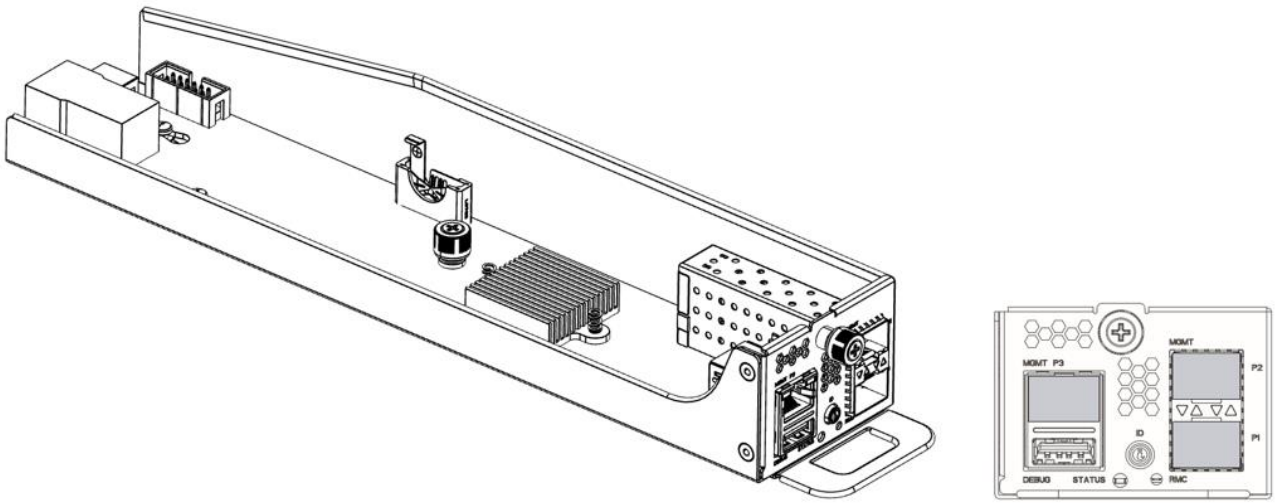

Figure 12 Open edge RMC mechanical assembly and front plate

3.6 RMC connector interface

The connector between the RMC and power distribution board is 8 x 13 AirMax VS2 (FCI 10133027-101LF, or equivalent). The corresponding connector on the RMC is FCI 10136593-102LF, or equivalent. The connector is shown in Figure 13.

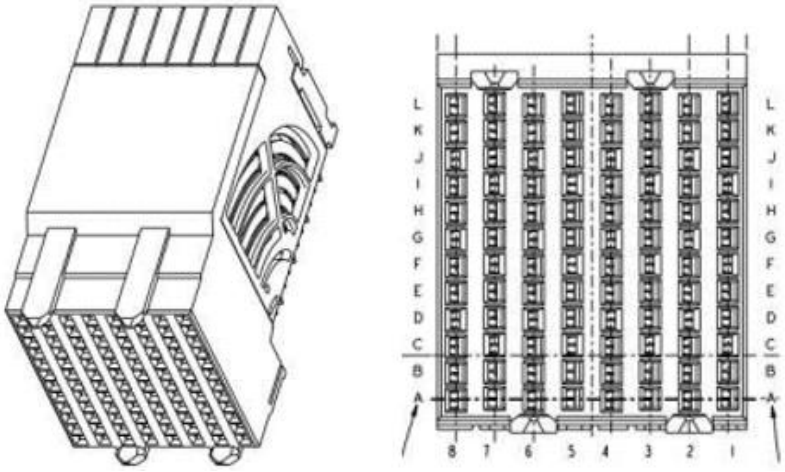

Figure 13 RMC signal connector with pin map

Pin assignment of the connector interface is shown in Table 5.

Table 5 Pin assignment of backplane signal connector

GND		GND		GND		GND		M
SMB_SLED_COMBINE_SDA	FM_SLED1_PRSNT_N	FM_RMC_GPIO_2	GND	LAN_SLED4_MDIP3	GND	LAN_SLED2_MDIN3	GND	L
SMB_SLED_COMBINE_SCL	IRQ_RMC_ALERT_N	FM_RMC_GPIO_1	LAN_SLED5_MDIP3	LAN_SLED4_MDIP3	LAN_SLED3_MDIP3	LAN_SLED2_MDIP3	LAN_SLED1_MDIP3	K
FM_PSU2_PRSNT_N	IRQ_PSU2_ALERT_N	FM_RMC_GPIO_0	LAN_SLED3_MDIN3	GND	LAN_SLED3_MDIN3	GND	LAN_SLED1_MDIN3	J
FM_BBU_PRSNT_N	GND	FM_BMC_SLED5_READY_N	GND	LAN_SLED4_MDIN2	GND	LAN_SLED2_MDIN2	GND	I
SMB_BBU_ALERT_N	IRQ_PSU1_ALERT_N	FM_BMC_SLED4_READY_N	LAN_SLED5_MDIN2	LAN_SLED4_MDIN2	LAN_SLED3_MDIN2	LAN_SLED2_MDIN2	LAN_SLED1_MDIN2	H
FM_PSU1_PRSNT_N	PWR_PSU2_PWROK	FM_BMC_SLED3_READY_N	LAN_SLED5_MDIP2	GND	LAN_SLED3_MDIP2	GND	LAN_SLED1_MDIP2	G
SMB_PMBUS_SDA	GND	FM_BMC_SLED2_READY_N	GND	LAN_SLED4_MDIP1	GND	LAN_SLED2_MDIN1	GND	F
SMB_PMBUS_SCL	PWR_PSU1_PWROK	FM_BMC_SLED1_READY_N	LAN_SLED5_MDIN1	LAN_SLED4_MDIN1	LAN_SLED3_MDIN1	LAN_SLED2_MDIP1	LAN_SLED1_MDIN1	E
GND	P12V_PSU_STBY	FM_SLED5_PRSNT_N	LAN_SLED5_MDIP1	GND	LAN_SLED3_MDIP1	GND	LAN_SLED1_MDIP1	D
P12V_PSU_STBY	GND	FM_SLED4_PRSNT_N	GND	LAN_SLED4_MDIP0	GND	LAN_SLED2_MDIN0	GND	C
P3V3_RMC_STBY	P12V_PSU_STBY	FM_SLED3_PRSNT_N	LAN_SLED5_MDIN0	LAN_SLED4_MDIN0	LAN_SLED3_MDIP0	LAN_SLED2_MDIP0	LAN_SLED1_MDIN0	B
GND	P12V_PSU_STBY	FM_SLED2_PRSNT_N	LAN_SLED5_MDIN0	GND	LAN_SLED3_MDIN0	GND	LAN_SLED1_MDIP0	A
8	7	6	5	4	3	2	1	

Table 6 RMC pin assignment in power distribution board (signal direction I/O/bidir from PDB perspective)

Signal	Type	Description
LAN_SLED[5..1]_MDIP[3..0] LAN_SLED[5..1]_MDIN[3..0]	Bidir	1000BASE-T between RMC and sled. Magnetics are required on sled baseboard.
FM_RMC_GPIO[2:0]	input	General purpose I/O signals driven by RMC to all sled baseboards. LVTTL/LVCMOS. The signal has 4K7 pull-up P3V3_RMC_STBY on RMC board.

		The input circuit design on sled shall prevent leakage current flow from RMC, e.g. during sled hot plug. GPIO[2:0] are used to indicate the status and air flow direction of PSUs to sleds according to the following table: 000: PSU1 not present, PSU0 front to rear (F-R) 001: PSU1 not present, PSU0 rear to front (R-F) 010: PSU0 not present, PSU1 F-R 011: PSU0 not present, PSU1 R-F 100: PSU0 /1 present, PSU0 /1 F-R 101: PSU0 /1 present, PSU0 /1 R-F 110: PSU0 /1 present, PSU0 F-R, PSU1 R-F 111: PSU0 /1 present, PSU0 R-F, PSU1 F-R
FM_BMC_SLED[5..1]_READY_N	Output/ OD	BMC status signal from sled to RMC. Active low. Open drain. The signal has 4K7 pull-up to P3V3_RMC_STBY on RMC board. The output circuit design on sled shall prevent leakage current flow from RMC, e.g. during sled hot plug.
FM_SLED1_PRSNT_N	Output	Sled presence status. Active low. The signal is used to inform RMC whether a sled is present in a slot. The signal has 4K7 pull-up to P3V3_RMC_STBY on RMC board.
IRQ_RMC_ALERT_N	Input/ OD	Alert signal from RMC to sleds (common to all sleds). Active low. Open drain. The signal has 4K7 pull-up to P3V3_RMC_STBY on RMC board. The purpose of the signal is to provide means to alert sleds e.g. in case of PSU failure or low input voltage.
IRQ_PSU[2..1]_ALERT_N	Output/ OD	Alert signal from PSU to RMC. Active low. Open drain. The signal has 4K7 pull-up to P3V3_RMC_STBY on PDB board.
PWR_PSU[2..1]_PWROK	Output/ OD	Power OK signal from PSU to RMC. Active high. Open drain. The signal has pull-up in PSU.
SMB_SLED_COMBINE_SDA	Bidir/ OD	SMBUS data between RMC and sleds (common to all sleds). Open drain. The signal has 4K7 pull-up to P3V3_RMC_STBY on RMC board. An I2C buffer (PCA9617A, or equivalent) is required on sled to act as bus repeater and to prevent leakage current flow from RMC, e.g. during sled hot plug.

SMB_SLED_COMBINE_SCL	Input/ OD	SMBUS clock from RMC to sleds (common to all sleds). Open drain. The signal has 4K7 pull-up to P3V3_RMC_STBY on RMC board. An I2C buffer (PCA9617A, or equivalent) is required on sled to act as a bus repeater and to prevent leakage current flow from RMC, e.g. during sled hot plug.
FM_BBU_PRSNT_N	Output	BBU presence signal to RMC. Active low. The signal is connected to GND on BBU board. The signal has 4K7 pull-up to P3V3_RMC_STBY on RMC board.
SMB_BBU_ALERT_N	Output/ OD	Alert signal from BBU to RMC. Active low. Open drain The signal has 4K7 pull-up to P3V3_RMC_STBY on backplane board.
SMB_PMBUS_SDA	Bidir/ OD	PMBUS data between RMC and PSU/BBU. Open drain. The signal has 4K7 pull-up to P3V3_RMC_STBY on RMC board.
SMB_PMBUS_SCL	Input/ OD	PMBUS clock from RMC to PSU/BBU. Open drain. The signal has 4K7 pull-up to P3V3_RMC_STBY on RMC board.
P12V_PSU_STBY	Power	+12 V standby voltage from PSUs to RMC. Power supply to RMC.
P3V3_RMC_STBY	Power	3V3 standby voltage from RMC to PDB (generated from P12V_PSU_STBY)
GND	Power	+12 V return, signal ground

Backplane guide pin

A guide pin in the backplane enables reliable mating of power and signal connectors between the backplane and sled. The guide pin is of type Starconn D11402-200000-Z1, or equivalent. The receptacle on the sled is of type Starconn D11403-000A00-Z1, or equivalent.

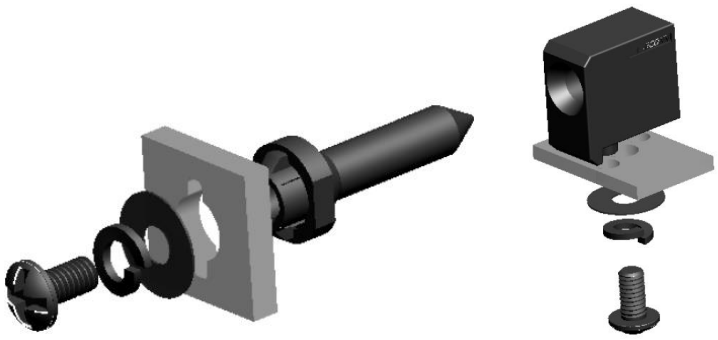

Figure *14* Guide pin in backplane and receptacle on sled board.

4 Environmental and regulatory specifications

Open edge HW can be in varying environments, where datacentre or central office-like conditions may not be always guaranteed. Hence environmental requirements are set slightly higher than for typical datacentre server products. Also, seismic tolerance is addressed.

Table 7 summarizes the key environmental and regulatory specifications for Open edge chassis and sleds.

Note, in order to meet all the key environmental and regulatory specifications, it is necessary to test an Open edge chassis including sleds, PSUs and RMC.

Table 7 Key environmental and regulatory specifications of Open edge chassis and sleds

	Specification
Operating conditions	Operating temperature range: -5 C …+45 C [ETSI EN300 019-1-3 Class 3.2] Short term operating temperature: -5 C to +55 C [GR-63-CORE] Operating humidity: 5 % to 95 %
Storage	ETSI EN 300 019-1-1, Class 1.2 (weather protected, not temperature-controlled storage)
Transport	ETSI EN 300 019-1-2, Class 2.2 (careful transportation)
Seismic tolerance	Earthquake risk zone 4 [GR-63-CORE]
Safety	IEC 62368-1:2014 GR-1089-CORE (electrical safety, grounding and bonding)
Fire resistance	GR-63-CORE (shelf level criteria)
EMC	EN300386 (v1.6.1) FCC CFR47 15 (class A), CISPR 22 (class A) CISPR 24 TEC/EMI/TEL-001/01/FEB-09 and TEC/IR/SWN-2MB/07/MAR-10 GR-1089-CORE
Acoustic noise	GR-63-CORE (equipment room criteria)
Material safety	RoHS 2011/65/EU, Article 7b (EN 50581, 2012)

Appendix A - backplane connector interface

The Open edge chassis backplane provides power feed to the sleds and signalling between the sleds and RMC. There is one power connector and one signal connector for interfacing each sled.

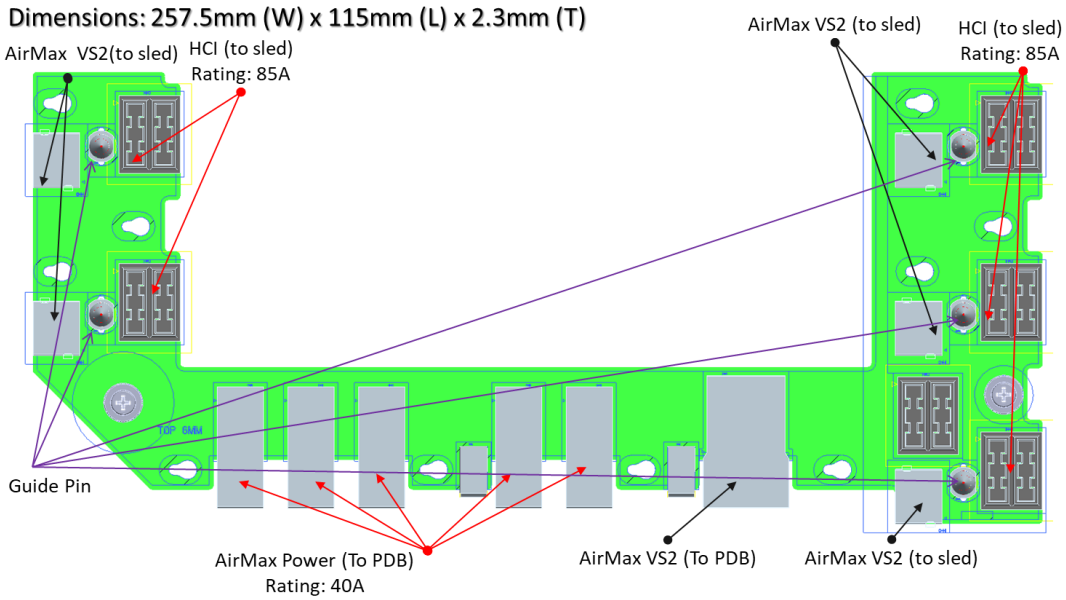

Figure 15 3U backplane connector placement

Backplane power connector

The chassis backplane will distribute +12 V power to the sleds. Power feed capacity is 400 W for a 1U sled and 700 W for a 2U sled. Power is fed through HCI High Power connector (FCI 10078768-001LHLF, or equivalent) having current capacity of 85 A. The corresponding power connector on the sled is FCI 10078770-002LHLF, or equivalent.

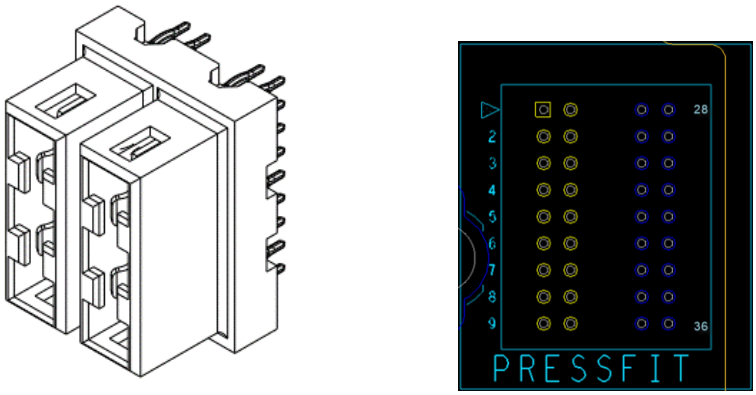

Figure 16 Backplane power connector (HCI) with board layout

Table 8 Pin assignment of backplane power connector

Pin	Signal name	Description
1-18	P12V_PSU	+12 VDC power feed to sled
19-36	GND	Ground, +12 VDC return

Backplane signal connector

The signal connector between backplane and sled is a 6 x 9 pin AirMax VS2 connector (FCI 10130665-102LF, or equivalent). The corresponding signal connector on the sled is FCI 10124149-102LF, or equivalent. The backplane connector is shown in Figure 17.

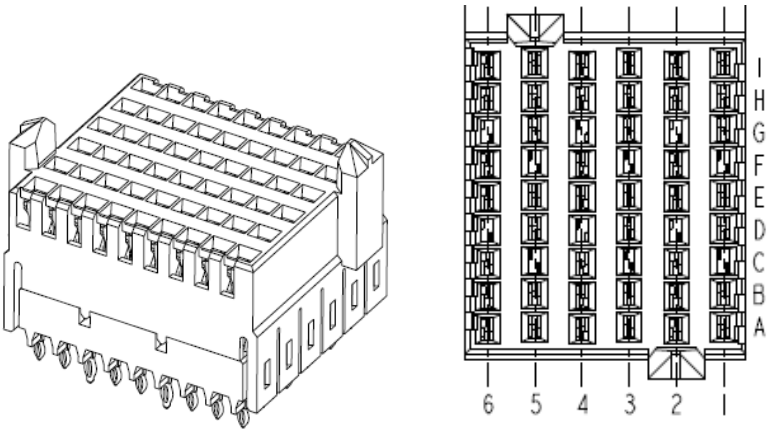

Figure 17 Backplane signal connector with pin map

Table 9 Pin assignment of backplane signal connector (connector for sled 1 shown)

GND (sled only)	NC	GND (sled only)	NC	GND (sled only)	NC	J
PD_SLED1_PRSNT_RETURN	GND	NC	GND	LAN_SLED1_MDIN3	GND	I
PD_BBU_A0	SMB_SLED_BUF_SDA	PD_SLED1_CHASSIS_INTRUSION	FM_BMC_SLED1_READY_N	LAN_SLED1_MDIP3	LAN_SLED1_MDIN2	H
GND	SMB_SLED_BUF_SCL	GND	FM_RMC_GPIO_2	GND	LAN_SLED1_MDIP2	G
FM_BBU_PRSNT_N	GND	NC	GND	NC	GND	F
SMB_BBU_ALERT_R_N	NC	NC	FM_RMC_GPIO_1	SB_SLED1_ADDR_2	LAN_SLED1_MDIN1	E
GND	NC	GND	FM_RMC_GPIO_0	GND	LAN_SLED1_MDIP1	D
SMB_PMBUS_BBU_SDA	GND	NC	GND	SB_SLED1_ADDR_1	GND	C
SMB_PMBUS_BBU_SCL	NC	NC	FM_SLED1_PRSNT_N	SB_SLED1_ADDR_0	LAN_SLED1_MDIN0	B
GND	P3V3_SLED1	GND	IRQ_RMC_ALERT_N	GND	LAN_SLED1_MDIP0	A
6	5	4	3	2	1	

Table 10 Backplane signal connector descriptions (signal direction I/O/bidir from backplane perspective)

Signal	Type	Description
SB_SLED1_ADDR_[2..0]	Output	Physical address from backplane to sled. The signal has 4K7 pull-up to P3V3_SLED1 or 1K pull-down to GND on backplane board. P3V3_SLED1 is fed to the backplane board by sled baseboard.

LAN_SLED1_MDIP[3..0] LAN_SLED1_MDIN[3..0]	Bidir	1000BASE-T between RMC and sled. Magnetics are required on sled baseboard.
FM_RMC_GPIO_[2:0]	Output	General purpose I/O signals driven by RMC to all sled baseboards. LVTTL/LVCMOS. The signal has 4K7 pull-up to P3V3_RMC_STBY on RMC board. The input circuit design on sled shall prevent leakage current flow from RMC, e.g. during sled hot plug. GPIO[2:0] are used to indicate the status and air flow direction of PSUs to sleds according to the following table: 000: PSU1 not present, PSU0 front to rear (F-R) 001: PSU1 not present, PSU0 rear to front (R-F) 010: PSU0 not present, PSU1 F-R 011: PSU0 not present, PSU1 R-F 100: PSU0 /1 present, PSU0 /1 F-R 101: PSU0 /1 present, PSU0 /1 R-F 110: PSU0 /1 present, PSU0 F-R, PSU1 R-F 111: PSU0 /1 present, PSU0 R-F, PSU1 F-R
FM_BMC_SLED1_READY_N	Input/ OD	BMC status signal from sled to RMC. Active low. Open drain. The signal has 4K7 pull-up to P3V3_RMC_STBY on RMC board. The output circuit design on sled shall prevent leakage current flow from RMC, e.g. during sled hot plug.
FM_SLED1_PRSNT_N	Input	Sled presence status. Active low. The signal is used to inform RMC whether a sled is present in a slot. The signal has 4K7 pull-up to P3V3_RMC_STBY on RMC board.
PD_SLED1_PRSNT_RETURN	Output	Return signal for FM_SLED1_PRSNT_N. Connects to ground on backplane board, pulling FM_SLED1_PRSNT_N (or FM_BBU_PRSNT_N) low when sled is inserted to chassis.
IRQ_RMC_ALERT_N	Output/ OD	Alert signal from RMC to sleds (common to all sleds). Active low. Open drain. The signal has 4K7 pull-up to P3V3_RMC_STBY on RMC board. The purpose of the signal is to provide means to alert sleds e.g. in case of PSU failure or low input voltage.
PD_SLED1_CHASSIS_INTRUSION	Output	Signal used to detect removal of sled. Active high. Connects to GND in backplane. The signal can be used to record an event of server sled tampering (removal from chassis). The circuit is

		located on sled baseboard and is powered by the back-up (RTC) battery. The implementation varies with e.g. the used CPU architecture.
SMB_SLED_BUF_SDA	Bidir/ OD	SMBUS data between RMC and sleds (common to all sleds). Open drain. The signal has 4K7 pull-up to P3V3_RMC_STBY on RMC board. An I2C buffer (PCA9617A, or equivalent) is required on sled to act as bus repeater and to prevent leakage current flow from RMC, e.g. during sled hot plug.
SMB_SLED_BUF_SCL	Output/ OD	SMBUS clock from RMC to sleds (common to all sleds). Open drain. The signal has 4K7 pull-up to P3V3_RMC_STBY on RMC board. An I2C buffer (PCA9617A, or equivalent) is required on sled to act as a bus repeater and to prevent leakage current flow from RMC, e.g. during sled hot plug.
PD_BBU_A0	Output	Physical address bit for BBU unit. The signal has 1K pull-down to GND on backplane board. The signal is present in sled1 connector only and is to be used by BBU only.
FM_BBU_PRSNT_N	Input	BBU presence signal to RMC. Active low. The signal is connected to GND on BBU board. The signal has 4K7 pull-up to P3V3_RMC_STBY on RMC board. The signal is present in sled1 connector only and is to be used by BBU only.
SMB_BBU_ALERT_R_N	Input	Alert signal from BBU to RMC. Active low. The signal has 4K7 pull-up to P3V3_RMC_STBY on backplane board. The signal is present in sled1 connector only and is to be used by BBU only.
SMB_PMBUS_BBU_SDA	Bidir/ OD	SMBUS data between RMC and BBU. Open drain. The signal has 4K7 pull-up to P3V3_RMC_STBY on RMC board.
SMB_PMBUS_BBU_SCL	Output/ OD	SMBUS clock from RMC to BBU. Open drain. The signal has 4K7 pull-up to P3V3_RMC_STBY on RMC board.
P3V3_SLED1	Power	3V3 auxiliary voltage from sled to backplane. Used as pull-up voltage for slot address.
GND	Power	Ground

Appendix B - power supply connector interface

The mating connector on Open edge power distribution board is shown in Figure 18. The connector type is High Power Card Edge (FCI 10130248-005LF, or equivalent), having separate power (P) and signal (S) contact zones. Currently, these PSU's are available from multiple suppliers. Pin assignment of the connector is shown in Table 11.

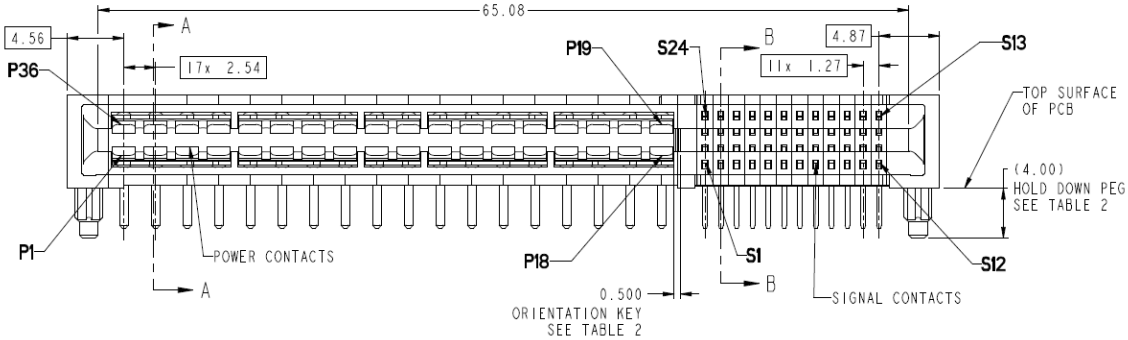

Figure 18 PSU mating connector

Table 11 Pin assignment of PSU mating connector on Open edge power distribution board (signal direction I/O/bidir from PDB perspective)

Pin	Signal name	Type	Description	Mating order *)
P1-P10	GND	Power	+12 VDC return, signal ground	1
P29-P36	GND	Power	+12 VDC return, signal ground	1
P11-P18	P12_PSU	Power	+12 VDC main input from PSU to PDB	2
P19-P28	P12_PSU	Power	+12 VDC main input from PSU to PDB	2
S1	PD_PSU_A0	Output	PMBUS address bit A0. The signal has pull-up in PSU. 1K pull-down to GND on PDB is used to set bit low.	2
S2	PD_PSU_A1	Output	PMBUS address bit A1. The signal has pull-up in PSU. 1K pull-down to GND on PDB is used to set bit low.	2
S3-S4	P12V_PSU_STBY	Power	+12 VDC stand-by input from PSU to PDB	2
S21-S22	P12V_PSU_STBY	Power	+12 VDC stand-by input from PSU to PDB	2
S5	PSU_HOTSTANDBYEN_H	Bidir	Hot standby enable output. Active-high. Connected to PSU_HOTSTANDBYEN_H signal of redundant PSU on PDB. Enables one of the PSUs to disable its output under certain load conditions to improve efficiency of the other PSU.	2

S6	PSU_ISHARE	Analog	Analog current share bus. Connected to PSU_ISHARE signal of redundant PSU on PDB.	2
S7	N.C.		Not connected	2
S8	FM_PSU_PRSNT_R_N	Input	Power supply seated. Active-low. The signal is connected to GND (through a 100 Ohm pull-down) in PSU. There is a 4K7 pull-up to P3V3_RMC_STBY on PDB to set the signal high if PSU is not present.	3
S9	PD_PSU_A2	Output	PMBUS address bit A2. The signal has pull-up in PSU. 1K pull-down to GND on PDB is used to set bit low.	2
S10-S15	GND	Power	+12 VDC return, signal ground	1
S16	PWR_PSU_PWROK_R	Input/ OD	Power OK signal from PSU to RMC. Active high. Open drain. The signal has pull-up in PSU.	2
S17	PSU_REMOTE_SENSE_P	Analog	Main output positive sense. The signal connects to P12_PSU for output regulation.	2
S18	PSU_REMOTE_SENSE_R	Analog	Main output negative sense. The signal connects to GND for output regulation.	2
S19	RQ_PSU_ALERT_R_N	Input/ OD	Alert signal from PSU to RMC. Active low. Open drain. The signal has 4K7 pull-up to P3V3_RMC_STBY on PDB board.	2
S20	PD_PSU_PSON_N		PSU on. Active-low. The signal has 1K pull-down to GND on PDB. PSU on/off control is done via PMBUS.	3
S23	SMB_PSU_SCL	Output/ OD	PMBUS clock from RMC to PSU/BBU. Open drain. The signal has 4K7 pull-up to P3V3_RMC_STBY on RMC board.	2
S24	SMB_PSU_SDA	Bidir/ OD	PMBUS data between RMC and PSU/BBU. Open drain. The signal has 4K7 pull-up to P3V3_RMC_STBY on RMC board.	2

*) 1 = first, 3 = last

Appendix C - CVE-2019-6260 vulnerability

User Guidance

In the industry, there is a known vulnerability, CVE-2019-6260, when using ASPEED AST2500.

There are some approaches to mitigate:

a. Designers can refer to AST_usrGuide_QuickRef for CVE-2019-6260 to fine tune the firmware.

b. Designers can use another BMC chip to replace ASPEED AST2500 in the derivative designs.

Nokia actions to Aspeed QuickRef

According to CVE-2019-6260, ASPEED AST2400 and AST2500 Baseband Management Controller (BMC) hardware and firmware implement Advanced High-performance Bus (AHB) bridges, which allow arbitrary read and write access to the BMC's physical address space from the host. The LPC, PCIe and UART AHB bridges are all explicitly features of ASPEED's designs for recovering BMC FW during firmware development or to allow the host to drive the BMC hardware even without any firmware on BMC. The CVE applies to the Eight (8) specific cases of iLPC2AHB bridge Pt I, iLPC2AHB bridge Pt II, PCIe VGA P2A bridge, DMA from/to arbitrary BMC memory via X-DMA, UART-based SoC Debug interface, LPC2AHB bridge, PCIe BMC P2A bridge, and Watchdog setup.

[Suggested Mitigation of CVE]

UART-based SoC Debug interface;

Nokia AirFrame server debugging interface (mini-USB) shall be used by an authorized person only.

Users shall limit the access to management interfaces which poses vulnerability risk. As AHB is board internal bus the AHB security issue is inside the server, so the security risk is fairly small. The board’s external interfaces are securely protected in design.

Nokia recommends using ASPEED AST2600 which provides the vulnerability correction and using SecureBoot to enhance security.